Permit

Waste Management Plan

Management System:	HSSE	**File Name:**	ELS-Permit-006
Approver:	CEO	**Version No:**	1.0
Reviewer:	Engineering Consultant	**Date of Issue:**	October 2022
Author:	Environmental Consultant		

Version	Section	Revision Information	Date	Reviser
0.1	All	Draft for internal review	Oct 22	Engineering/ CEO
1.0	All	Finalised for submission to the EA	Oct-22	Env Consultant

Environmental Permit documentation is controlled by internal Cuadrilla Procedures. Submitted documentation to external agencies represents the current version of the document.

Contents

1.0 Introduction 3
1.1 Background 3
1.2 Site location 3
1.3 Scope of waste management plan (WMP) 3
2.0 Site facility classification and operations 4
2.1 Description of operations 4
2.2 Operations 6
2.2.1 Surface 6
2.2.2 Subsurface 6
2.3 Maintenance 7
2.4 Plugging and well decommissioning 7
3.0 Waste Management & Monitoring 8
3.1 Waste Characterisation & Management 8
4.0 Competency 11
5.0 Control and monitoring 12
5.1 Control & Risk Barriers 12
5.1.1 Site Containment 12
5.1.2 Produced Water Tank 12
5.1.3 Bund 12
5.1.4 Bund Capacity 13
5.1.5 Bund Outline Design 13
5.1.6 Well Cellar 14
5.1.7 Pipework 15
5.1.1 Separator 15
5.2 Site Control 15
5.3 Monitoring 15
5.3.1 Produced Water & Waste 15
5.3.2 Natural Gas & Fugitive Emissions 15
5.3.3 Chemicals and Hydrocarbons 16
5.4 Records Management 17
6.0 Complaints 17
7.0 Proposed plan for closure 17
8.0 References 18
9.0 Appendix A: Elswick Site Conceptual Drawing 19
10.0 Appendix B: Noise Data 20

1.0 Introduction

1.1 Background

Cuadrilla Elswick Limited (hereinafter "Cuadrilla") operates the Elswick gas production field located within onshore exploration licence EXL 269, in Fylde, Lancashire.

The Elswick exploration well was initially drilled by Gas Council Exploration Limited, a wholly owned subsidiary of British Gas plc between 29th April and 3rd June 1990. The primary objective of the exploration well was to evaluate the reservoir potential of the Collyhurst Sandstone. The well was drilled to a total depth of 5300ft md RKB (Rotary Kelly Bushing). The top of the Collyhurst Sandstone was encountered at 3408ft md (measured depth). The Collyhurst Sandstone was tested and produced natural gas.

Commercial production from the gas well commenced in July 1996 with the produced gas being converted into electricity via a 1 MWe natural gas fired generator connected to the local district electricity network. Following mechanical failure of the generator the well has been "shut in" from producing natural gas since 2014.

A replacement to the site generator is proposed to improve the efficiency of conversion from a depleting gas field. The site received planning permission from Lancashire County Council in 2020 for a 5-year extension to its previous production permission. Following installation of the modern generator and subject to the necessary consents and permissions being granted the site will continue to produce gas and electricity into the local 11Kv grid. The life expectancy of the site is up to 5 years from the restart of production.

1.2 Site location

The ~1ha well pad is situated at:

Elswick Production Facility

Roseacre Road

Elswick

Lancashire

PR4 3XD

The national grid reference for the Site is (NGR) SD 42312 36990.

The surface site boundary (ELS-Permit-004)

1.3 Scope of waste management plan (WMP)

Cuadrilla's waste management plan has been developed to meet the requirements of Article 4 and 5 of the Mining Waste Directive 2006/21/EC (the 'Mining Waste Directive'):

1. *Pursuant to regulations implementing Article 4 of the Mining Waste Directive Cuadrilla is required to take the necessary measures to ensure that extractive waste is managed in a controlled manner without endangering human health or harming the environment.*
2. *Pursuant to regulations implementing Article 5 of the Mining Waste Directive Cuadrilla is required to prepare a Waste Management Plan for the minimisation, treatment; recovery and disposal of extractive waste, taking account of the principle of sustainable development.*

The process of generating electricity from natural gas will generate extractive waste which falls under the scope of the Mining Waste Directive and, as a result, an environmental permit is required under the Environmental Permitting (England and Wales) Regulations 2016 (as amended) (the 'EPR').

The plan is required to be updated at least every five years, or whenever a substantial change to the mining waste operation or the waste deposited occurs, in accordance with Article 5 (4) of the Mining Waste Directive.

2.0 Site facility classification and operations

2.1 Description of operations

The management of extractive waste at site shall constitute a mining waste operation (under the EPR). The operation shall include a single mining waste operation (as defined in the EPR) as follows:

1. mining waste operation means the management of extractive waste, whether or not involving a mining waste facility, but does not include the activities in Article 2(2)(c) of the Mining Waste Directive.

A mining waste facility does not apply in the context of the Elswick site. The initial injection of 163m³ (~1020bbls) flowed back to the surface at a rate ratio of 25bbls per million standard cubic feet of gas produced during well clean up. The total quantity produced during the well clean was approximately 125bbls (~20m³). The well test data did not identify hydrogen sulphide in the gas composition.

Since the 1993 flow test, the well has been producing formation fluid on a consistent basis. Historical records approximate fluid producing: 832m³ between 30/07/1996 – 31/12/2009 and 280m³ between 01/01/2010 – 31/12/2014. Predicted annual water production is between 2,500bbls to 2000bbls (~350m³) per annum depending on natural gas flow rate. This equates to approximately 1m³ per day.

The surface area of the site used for the deposit, accumulation and storage of extractive waste is isolated to a small area and are beyond the relevant period specified in Article 3(15) of the Mining Waste Directive.

The surface boundary of the mining waste operation is illustrated in ELS-Permit-004

Table 1 below sets out the assessment and classification of the extractive waste that will occur during the production of natural gas.

Table 1: Extractive Waste Stream Classification & Assessment

Waste stream	Assessment	Classification
Natural Gas	Surplus natural gas could be temporarily vented during abnormal events or emergency conditions and will be recorded as disposal. For the purposes of this management plan the gas is recorded as a waste in accordance with the revised Waste Framework Directive. The natural gas will be vented within a small stack without being deposited or accumulated on site. The composition has been assessed as hazardous (highly flammable).	Waste operation
Produced Water	Produced fluid generated from the wellbore will be temporarily accumulated on site as a waste within a holding tank. The composition has been assessed as non-hazardous The waste stream is also defined as radioactive waste in accordance with the EPR owing to the potential presence of naturally occurring radioactive material (NORM) at a concentration >1 Becquerel per litre (>1Bq/l).	Waste operation
Water Based Muds	A contingency option for the plugging and decommissioning of the well phase, the muds could be used to lift debris left in the well. The composition has been assessed as non-hazardous	Waste operation

Scale	Returned produced fluid containing soluble minerals can potentially deposit scale within pipework and within site equipment, resulting in an accumulation of waste. Scale, if deposited, will be periodically removed as part of routine maintenance and will be temporarily stored on site. The composition of the scale will need to be determined from testing if the waste actually occurs. In case it should be found to contain any dangerous substances above the relevant threshold, scale has been classified as a non-hazardous waste stream. There is a possibility that the waste stream will exhibit radioactivity and hence also be defined as radioactive waste in accordance with the EPR owing to the likely presence of naturally occurring radioactive material (NORM).	Waste Operation

2.2 Operations

2.2.1 Surface

The site surface equipment has a single wellhead connected to 3" pipework. Combined natural gas and produced water flow from the well under natural formation pressure towards a production separator. The natural gas and produced water are then separated, directing produced water towards a bunded storage tank. All processing equipment (production separator and storage tank) are situated on hard standing areas. The natural gas flows into a gas only pipework which directs the natural gas into a gas-fired generator. Gas is combusted to generate electricity into the local distribution network operator ("DNO"). The generator at Elswick is rated to 1MWe.

A replacement gas powered generator will be installed inside the generator building connected to the electricity DNO connection point. The wellhead, surface separator and produced water tank will remain as currently arranged.

Figure 1: Plan view of the site set up.

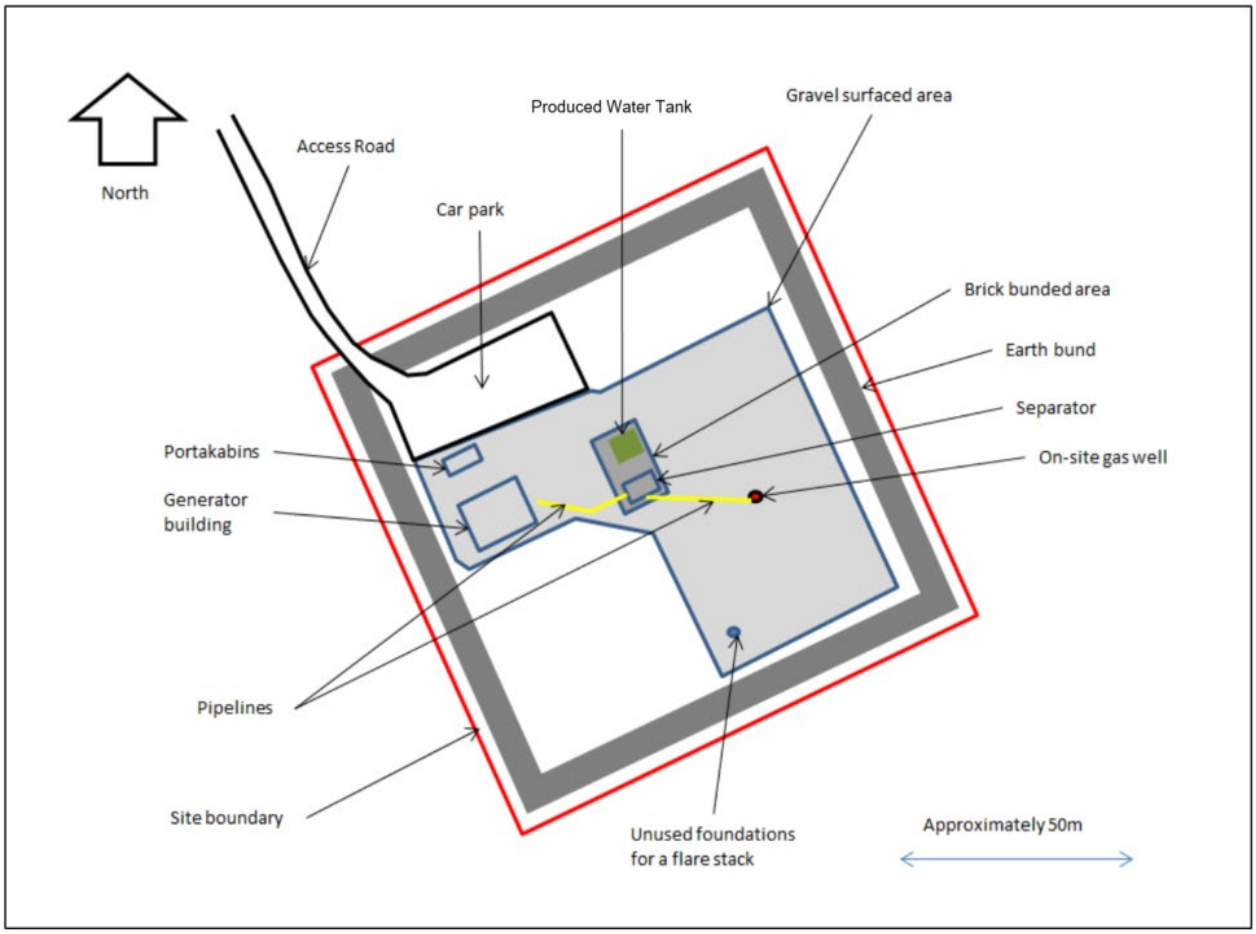

2.2.2 Subsurface

There are no planned sub surface activities for the restart of production phase of operations apart from the plug and decommissioning of the well at the end of field life. See section 7 closure plan.

The well was constructed to a depth of 5300ft in summer 1990 and stimulated in 1993. The drilling and casing program installed the following:

- 13 3/8" casing to 64ft
- 9 5/8" casing to 727ft
- 7" casing to 2949ft
- 5" casing to 5236ft
- TD 5300ft

2.3 Maintenance

General maintenance activities may be conducted for surface equipment e.g., replacement parts and oil top up. There are no planned sub surface maintenance activities for the well.

2.4 Plugging and well decommissioning

Once the site reaches the end of its production life, the well will be plugged with cement and decommissioned. Plugging of the well shall be conducted in accordance with the planning permission and in conformance with the prevailing edition of the Oil & Gas UK guidelines and regulations in effect at that time.

3.0 Waste Management & Monitoring

Article 5 of the Mining Waste Directive requires Cuadrilla to prepare a waste management plan (WMP) *for the minimisation, treatment, recovery and disposal of extractive waste, taking account of the principle of sustainable development.*

This section of the plan applies the waste management hierarchy to the design of the project and the site operations by examining for each mining waste stream the potential to eliminate, reduce, reuse, recycle and finally dispose of that waste stream from the site.

3.1 Waste Characterisation & Management

An assessment of the potential extractive wastes arising during the operations has been undertaken. The potential waste, together with its classification, anticipated quantities, prevention, minimisation, treatment and disposal is provided in this section.

Produced Water		
Waste Classification, Quantity and storage	Classification	Non-hazardous
	EWC Code	01 01 02
	Estimated Quantity	~300m³ to 350m³ per annum
	Storage Arrangements	Capacity: 25 m³ Design: Single skin horizontal steel container
Waste Stream Generation	Formation fluid produced along with the natural gas from the target underground formation.	
Waste Hierarchy Compliance	The fluid is impossible to de-couple from the operation and cannot be prevented or reused at site. The fluid is separated at surface from the natural gas and sent to a storage tank for accumulation. There is no option to reinject the fluid at site, no reinjection well exists and injection into the formation would not provide any benefit to natural gas production. The fluid will therefore continue to be transported off site to a permitted waste treatment facility.	
Changes to Waste Stream	There are no expected changes to the waste stream on exposure to above ground conditions.	
Waste Handling and Transfer	A licensed waste carrier using a vacuum suction tanker or road barrel.	
Waste Disposal	Third party permitted waste facility with the EWC coding to accept produced water and potentially naturally occurring radioactive material.	

Natural Gas		
Waste Classification, Quantity and storage	Classification	Hazardous
	EWC Code	16 05 04*
	Estimated Quantity	<10 tonnes per day
	Storage Arrangements	Capacity: >1kg Design: vent stack 8m high
Waste Stream Generation	Primarily this waste stream will only be generated in emergency situations or abnormal process upsets.	
Waste Hierarchy Compliance	In abnormal or emergency events the gas will be vented and cannot be captured for reuse. The primary purpose of natural gas will be fulfilled with a gas-powered generator on site to produce electricity, but this is not classified as a waste stream. See accompanying CBA (cost benefit analysis) assessment of why venting is the preferred option than a 24/7 flare.	
Changes to Waste Stream	Changes in pressure and temperature will affect gas expansion in comparison to formation conditions as it rises to surface.	
Waste Handling and Transfer	n/a	
Waste Disposal	Vent on site rather than flared due to low levels of inventory.	

Scale		
Waste Classification, Quantity and storage	Classification	Non-hazardous
	EWC Code	01 05 06*
	Estimated Quantity	0.1t
	Storage Arrangements	Capacity: up to 0.1t Design: Within pipework/ tanks
Waste Stream Generation	Potential for the scaling-up of pipework (with insoluble radium carbonate and sulphate scales), and/or the contamination of phase separator equipment/material.	
Waste Hierarchy Compliance	The generation of scale is not expected in significant quantities; however, it is impossible to decouple scale from the operations. The scale will be managed, treated, and sent off site for disposal.	
Changes to Waste Stream	Dissolved minerals settle out at surface and scale and sludge's form in tank pits or inside pipework	
Waste Handling and Transfer	Pipeline/ equipment removal or descaling on site to remove quantity of scale.	
Waste Disposal	Third party permitted waste facility with the EWC coding to accept produced water and potentially naturally occurring radioactive material.	

Water Based Muds		
Waste Classification, Quantity and storage	Classification	Non-hazardous
	EWC Code	01 05 04 (Freshwater) 01 05 08 (Chloride)
	Estimated Quantity	~50m³
	Storage Arrangements	Capacity: 50m³ Design: Mud system/ open top tank system with steel containers
Waste Stream Generation	Contingency waste stream; used to lift debris from the wellbore during the well plug and abandonment stage.	
Waste Hierarchy Compliance	Minimise the mud quantity using accurate wellbore calculations and requirements to lift the cuttings. Muds will be treated and reused on site within a closed loop system for further lifting of cuttings. Once the operation is completed the drilling fluid supplier may request that the drilling fluid is returned to them for reclamation for further use with or without treatment at another well site independent from Cuadrilla.	
Changes to Waste Stream	There are no expected changes to the waste stream on exposure to above ground conditions.	
Waste Handling and Transfer	A licensed waste carrier using a vacuum suction tanker or road barrel.	
Waste Disposal	Third party permitted waste facility with the EWC coding to accept water-based muds.	

4.0 Competency

The management arrangements (ELS-Permit-001) details roles and responsibilities for site environmental management and monitoring. Cuadrilla's site supervisor has overall responsibility for ensuring that the operations conducted are in compliance with the environmental permits and other associated legislation. The site supervisor takes command of the site and is deemed the competent person who manages the facility.

The environmental representative is accountable for maintaining compliance arrangements with the environmental permit and ensuring that adequate and competent resources are in place to provide technical support to the site supervisor.

'Competent person' qualifications will include the following:

- Academic qualifications;
- Professional qualifications e.g. membership of applicable institutions;
- External training qualifications / certification;
- Those with approved training to cascade training to other staff;
- Attendance / delivery of internal and external training courses; and
- Attitude to compliance and approach to work;
- Applicable industry work experience;

As part of Cuadrilla's competency framework, key posts have been identified that are either safety or environmentally critical.

Cuadrilla's employees, contractors and consultants will be given appropriate training that is relevant to their needs. The training needs are identified through risk assessment, role profiles and the requirements for delivering Cuadrilla's HSE Policy.

Relevancy will be determined by reference to the Cuadrilla training matrix which has been developed to ensure the right person with the right competence is in the right role.

Where gaps are identified, a training needs analysis will be conducted, and the training matrix updated to reflect the changes. This will be reviewed and updated as required with refresher training. Records of training will be kept in accordance with Cuadrilla written management procedures.

5.0 Control and monitoring

5.1 Control & Risk Barriers

The ERA (ELS-Permit-005) coupled with the findings of the site condition report (ELS-Permit-002), demonstrates that the management of extractive wastes, combined with the proposed risk control measures, poses no significant risk to the environment.

5.1.1 Site Containment

A site conceptual model (surface and subsurface) was conducted in 2015 to review the risks presented by the site facility, see Appendix A diagrammatic assessment. Since 2015 there have been no alterations to the site which would invalidate the conceptual model.

This permit updates the conceptual model with the addition of a replacement generator, however considering this is located in the same generator house, the risk remains the same.

The subsurface wellbore was constructed in accordance with the prevailing requirements at the time. Regular planned inspections continue to monitor the integrity of the well. There are no indications that well integrity has failed or compromised. The operating philosophy will remain that there must be two barriers maintained during the production phase and decommissioning phase. Cuadrilla will submit a BSOR notification to the Health and Safety Executive detailing the plug and decommissioning design at the end of field life.

Cuadrilla has undertaken a review of the hazards and risks associated with the storage of liquids in accordance with CIRIA C736. The permit does not include activities such as drilling or well stimulation, so a pad wide membrane is not required. The formation does not produce liquid hydrocarbons or condensate; therefore, this risk is eliminated. The main containment risk is from the storage of produced water which is stored in a single layer tank.

The conclusion from the environmental risk assessment (ELS-Permit-005) determines that produced water is a low no flammable risk, therefore a containment measure class 1 bund is justified.

5.1.2 Produced Water Tank

The primary containment for the produced water is a single layer storage tank. An inspection of the produced water tank will be conducted prior to reintroducing produced water to ensure the tank remains fit for purpose. Records of the inspection will be maintained for inspection.

5.1.3 Bund

Secondary containment will be managed by a local bund. The existing bund will be assessed and refurbished to align with modern containment standards. The produced water tank is already spotted inside the existing concrete bund, see photo 1.

Photo 1: Produced Water Tank, capacity of 25m³

5.1.4 Bund Capacity

The produced water tank has the capacity to hold 25,000 litres (25m³). The tank will be fitted with two alarms as the site is not continuously manned. The high-level alarm will trigger a requirement for the storage tank to be unloaded via a licensed third-party tanker. Allowing for a 4-day turnaround for a tanker to arrive, using the predicted flow rate of 1m³ per day, the high-level alarm will be set at 20,000litres. A high-high alarm will trigger a site shut down at 24,500litres and the well will be shut-in at surface. This is an unlikely event and will only occur during abnormal or emergency events.

Accounting for the tank capacity the following bund capacity is proposed or equivalent dimensions to hold 110% capacity of the storage container e.g., heigh of the bund may increase and subsequently the length and width of the bund may decrease.

- Freeboard: 100mm (unplanned events)
- Rainfall: 25mm (max rainfall per day)
- Height of bund required: 560mm (subtract freeboard and rainfall = 460mm)
- Length: 10,000mm (existing length)
- Width: 6,000mm (existing width)

Capacity of bund = 0.46m x 10m x 6m = 27.6m³ (110% of the 25m³ tank capacity).

5.1.5 Bund Outline Design

According to CIRIA 736 reinforced masonry bunds are suitable for class 1 (low risk site) where the inventory is not flammable (produced water is not flammable and classified as non-hazardous).

To accord with this standard, the bund will be refurbished to comply with section 7.3.2. of the CIRIA guidance and a waterproof render applied with a hydrophobic polyurethane liquid (sealing compound) or equivalent, to seal joints along the floor and wall. The reinforced masonry bund will follow the principles of the outline design in Appendix A7 of CIRIA 736:

Drawing A7 source: CIRIA 736

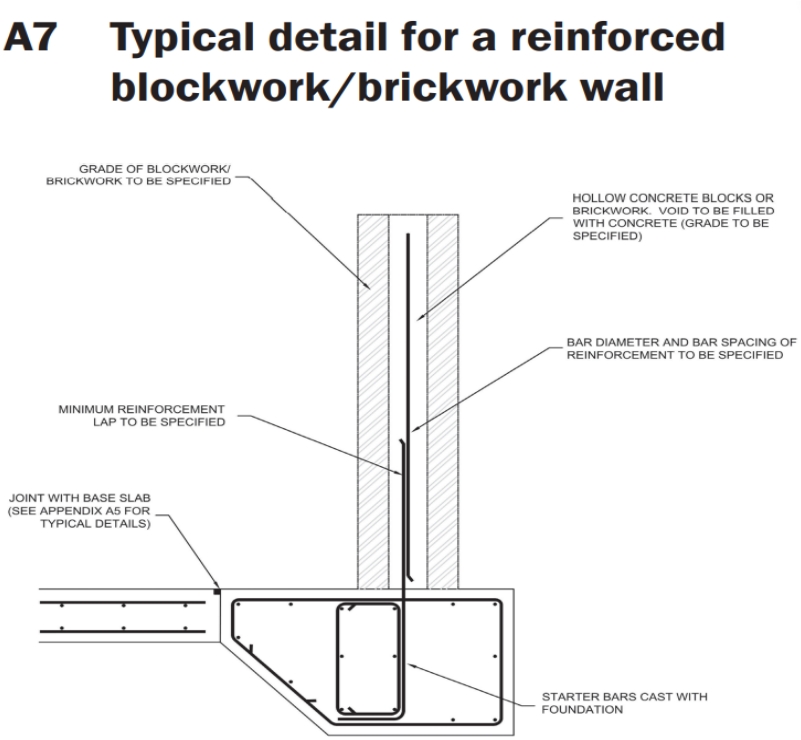

Figure A7.1 Typical detail for a reinforced blockwork/brickwork wall

5.1.6 Well Cellar

The cellar has been and continues to be watertight. Before the re-start of operations a check for integrity will be conducted in accordance with this procedure and records kept. The methodology for checking cellar integrity will follow this process:

The cellar needs to be cleared of all non-fixed structures

1. The cellar is filled and left for 24 hours depth changes monitored every hour and the results noted. An evaporation container is also filled and the level marked. This is monitored for a reduction in level due to evaporation

2. The permissible drop in water level allowing for evaporation should not exceed 1/500th of the average water depth of the full cellar.

3. If the cellar is not found to be watertight then it should be drained and remedial treatment of the concrete, cracks or joints should, where practicable, be carried out from the liquid face.

4. When a remedial lining is applied to inhibit leakage at a crack it should have adequate flexibility and have no reaction with the liquid stored

5. The test should be repeated until the bund is found to be watertight.

The wellhead located within a security cage will be subjected to periodic monitoring for leaks and weeps.

5.1.7 Pipework

Overground 3" pipework from the wellhead will transport natural gas and produced water towards the separator. The length of the pipework is approximately 30m to the separator and a further 20m to the gas-powered generator. The pipework is located behind security fence lines.

Leaks from the pipework will be monitored via Cuadrillas existing leak detection programme. It is not proposed to line underneath the pipework route as it is designed to be a gas tight sealed system. Breaking of containment is not planned for the remaining duration of the lifetime. If maintenance is required on the pipework which requires breaking integrity, then a method statement will be produced to manage potential dips and leaks.

5.1.1 Separator

The separator is currently located on a concrete hard standing area. There is no planned break to integrity to access the separator.

5.2 Site Control

The site will be normally unmanned with planned weekly site visits and inspections. The site is secured with a ~2m high perimeter security fence and internal 1.5m high security fence with barb wire. A cage is fitted around the well head to prevent un-authorised persons entering.

On a day-to-day basis there will be no operator attendance as the plant parameters and alarms will be available off-site. There will also be remote CCTV coverage of the main plant areas.

It is anticipated that there will be a weekly inspection programme where an operator will attend the site. This is to monitor plant trends and note items that may require attention during planned maintenance outages. It is anticipated that there will be a single plant maintenance outage every year once the site is fully commissioned. The weekly inspection will inspect the collected rainwater levels in the bund. Rainwater from the bund will be vacuum sucked by a tanker and transported off site to a permitted facility, which will maintain the 110% capacity rating. A visual gauge will be installed to show the site supervisor when the bund requires emptying.

5.3 Monitoring

The operation has been assessed as low risk and is not expected to cause significant effects upon the environment. Therefore, the monitoring regime reflects the risk and impacts.

5.3.1 Produced Water & Waste

Waste produced water will be sampled at the beginning of flowing the well and then on a quarterly basis for waste characterisation as a record. The laboratory analysis parameters will be subject to the requirements of the third-party waste disposal facility but will include metals, salts and Naturally Occurring Radioactive Material (NORM). The site will be managed under a standard rules RSR (Radioactive Substances) permit to manage the producing of Type 2 NORM activities.

The quantity of each waste will be recorded as it is removed from site as well as the waste transfer note. All records of waste movements will be retained by Cuadrilla and made available for inspection by the Environment Agency on request. The same details will be recorded for all extractive waste removal.

5.3.2 Natural Gas & Fugitive Emissions

At the start of flowing gas and then on an annual frequency a leak detection and repair regime will be conducted in accordance with Cuadrilla's internal procedure. The procedure (HSE-CORP-PRO-032) aligns with BS EN 15446: 2008.

A venting register will be kept logging emergency or abnormal events. If a blowdown is required, the duration will be short as the emergency valves actuate. It is anticipated that the quantities of venting to atmosphere will be very infrequent. If maintenance is required at the facility and pipework integrity requires breaking, the plant

inventory will be blowdown via the vent. A separate CBA accompanies this plan to demonstrates the cost of flaring verses venting. The site gas analysis shows the waste stream to be free from Hydrogen Sulphide.

5.3.3 Chemicals and Hydrocarbons

Small quantities of chemicals or oils will be temporarily stored at site during routine maintenance of the gas-powered engine. The storage of chemicals and oils will be in the generator building on a concrete plinth with drip trays and spill kits available to manage a leak locally.

5.3.3.1 Groundwater & surface water monitoring

It is not proposed to monitor surface water due to the lack of proximity to a receptor and no hydraulic pathway between the site and Scholar Brook, which is approx. 300m from the site. A minor drain flows 200m south of the site. There are no immediate pathway or drainage connection to the field rain.

The locality of ponds within the vicinity of the site indicates a low permeability of the superficial deposits in the area and lack of hydrogeological connectivity to the site.

The risk assessment identifies a low risk to surface water and consequently does not require monitoring.

The produce water tank will be in a CIRIA compliant bunded area preventing spillages or drips onto the wider site and hydrogeological receptors. Furthermore, the wellbores integrity is assured by two sets of casings and cement, which prevents lateral and upward migration of natural gas into the surrounding groundwater formations. Therefore, groundwater monitoring does not require monitoring.

5.3.3.2 Air quality monitoring

There is no planned air quality monitoring for the operations as the generators air quality will be managed via the Medium Combustion Plant Directive objectives. Venting from the site will be very infrequent, if at all during production, and reflects a minor inventory of gas that does not justify a flare installation.

5.3.3.3 Odour monitoring

The quantity and type of extractive wastes is not anticipated to be malodorous and nor are any of the associated processes that will be performed. Odour monitoring is therefore not proposed.

5.3.3.4 Noise monitoring

The generator will be contained in soundproof housing and located inside an existing generator building, which housed the historic generator since the 1990's. The nearest residential receptor is over 440m from the generator building.

Initial calculations shows that the receptor will typically receive a level of 30dB(A) to 35dB(A) including a tonality penalty of between +2dB and +4dB assuming a worse case that the sound is perceptible. Other penalties of impulsivity and intermittency are not expected with a small generator operating consistently.

The calculated 30-35dB(A) is based on A-weighted noise level from the octave band level provided in Appendix B and a reduction of 10 dB by the double barrier provided by the generator acoustic housing and the generator building. There will be no line of sight to the generator from the nearest receptors.

Noise monitoring is proposed to be conducted before the start of operations as a precautionary approach to establish a baseline and then continue for the first week of operations. This will validate the predicted noise levels. A report will document the noise levels and will be available for inspection as a record.

5.3.3.5 Soil testing

A phase 1 contaminated land assessment was undertaken by Mott Macdonald in 2015. The conceptual model is appended to this document (Appendix A). Soil testing will be conducted at the end of the restoration phase and prior to permit surrender to demonstrate a clean and uncontaminated site. The suite and parameters of soil

testing will be done in accordance with the prevailing standards required and agreed with the Environment Agency.

5.4 Records Management

The results of monitoring will be used to update the site condition report (ELS-Permit-003) and environmental performance of the operation. The monitoring details shall be used to inform the site closure plan. Records will include:

- Results of monitoring data
- Waste storage and disposal
- Spills on site
- Soil data

6.0 Complaints

If complaints are received from third party stakeholders, including neighbours, they will be recorded, investigated and responded to in accordance with the Cuadrilla's existing complaints handling procedures. Relevant complaints will be reported to the Environment Agency within 48 hours and a plan detailing appropriate measures to resolve any issue identified.

7.0 Proposed plan for closure

If a decision is taken to close the site, the well shall be plugged and decommissioned in accordance with established procedures and the following regulatory provisions:

- the Borehole Sites and Operations Regulations 1995;
- the land-based requirements of the Offshore Installations and Wells (Design & Construction etc) Regulations 1996;
- Petroleum Exploration and Development Licence (PEDL) 165.
- the Oil & Gas UK Well Decommissioning Guidelines issue 6 June 2018

In addition, the guidance set out by UKOOG entitled ‘UK Onshore Shale Gas Well Guidance’ will also be observed.

Plugging and decommissioning requires isolating different zones of the wellbore (e.g. at surface, hydrocarbon and permeable) by permanent barriers. The permanent barriers, for example cement plugs, are designed to ensure complete isolation of the wellbore. During the isolation the cement plug will be tagged, touching the top of the cement plug with a drill pipe, to verify its position and confirm the cement has set. The sealing capability of the plug / barrier is verified further by a pressure test, for example the magnitude of which should be a minimum of 500 psi above the injection pressure below the barrier but not exceed the casing strength. Once the wellbore has been plugged and decommissioned no further maintenance is required. However, to verify barrier construction, monitoring of the well pressure will be conducted in agreement with the regulator at the time of abandonment. This process will follow the Oil & Gas UK and UK Onshore Operators Group guidelines and is reviewed by an independent well examiner and the HSE.

When the site is closed, a closure plan will be developed that covers all the required measures detailed in the relevant Environment Agency guidance prevailing at that time, guidance for: mining waste operations as part of an application to surrender the environmental permit. This will cross-reference the updated site condition report and consider any changes in conditions. The closure plan will include a commitment to post well abandonment monitoring in line with the historical operation of the site and in accordance with regulatory/ industry guidance at the time of plugging and decommissioning of the well.

8.0 References

DEFRA, Green leaves III, Guidelines for Environmental Risk Assessment and Management, November 2011

An Environmental Risk Assessment for shale gas exploratory operations in England Version 1, August 2013

BS 4142:2014+A1:2019 Methods for rating and assessing industrial and commercial sound

Flewelling and Sharma, 2013, Constraints on upward migration of hydraulic fracturing fluid and brine, July 2013

International Union of Pure and Applied Chemistry, 2014

Jones H K, Morris, B L, Cheney, C S, Brewerton, L J, Merrin, P D, Lewis, M A, MacDonald, A M, Coleby, L M, Talbot, J C, McKenzie, A A, Bird, M J, Cunningham, J, and Robinson, V K. 2000. The physical properties of minor aquifers in England and Wales. British Geological Survey Technical Report, WD/00/4. 234pp. Environment Agency R&D Publication 68.

King, Society of Petroleum Engineers, Hydraulic Fracturing 101, What Every Representative, Environmentalist, Regulator, Reporter, Investor, University Researcher, Neighbor and Engineer Should Know About Estimating Frac Risk and Improving Frac Performance in Unconventional Gas and Oil Wells February 2012

Mitschanek, M et al , Society of Petroleum Engineers. Modeling Transportation Logistics, Water Use, and Surface Footprint for Shale Gas Field Developments. February 2014

Styles et al, April 2012, Preese Hall Shale Gas Fracturing Review and Recommendations for Induced Seismic Mitigation

UK Onshore Shale Gas Well Guidelines, Exploration and Appraisal Phase, Issue 1 February 2013

9.0 Appendix A: Elswick Site Conceptual Drawing

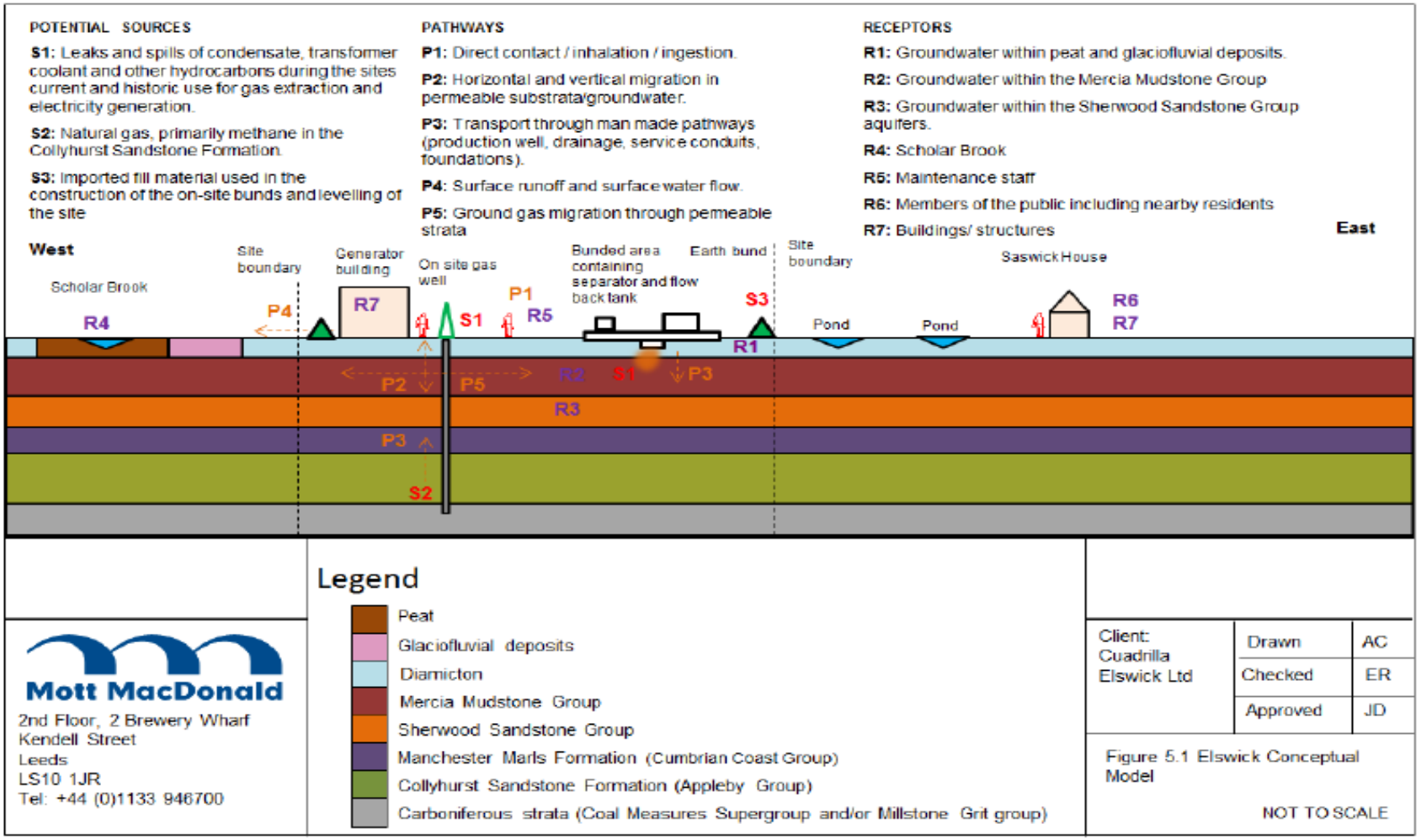

10.0 Appendix B: Noise Data

Noise levels

The figures for total noise levels are typical for an engine running at the continuous baseload power rating in a semi-reverberant environment and measured at a distance of one metre from the periphery of the engine (sound pressure level re: -20 x 10^{-6} pa).
Ambient noise level ... 78 dBA

Position	Noise Level (dBA)
1	106.4
2	105.4
3	103.4
4	102.1
5	99.8
6	102.8
7	105.6
8	104.3
9	104.6
10	105.0
11	103.5

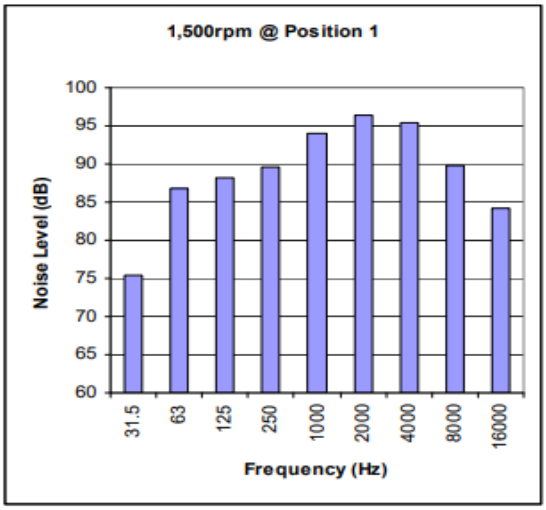

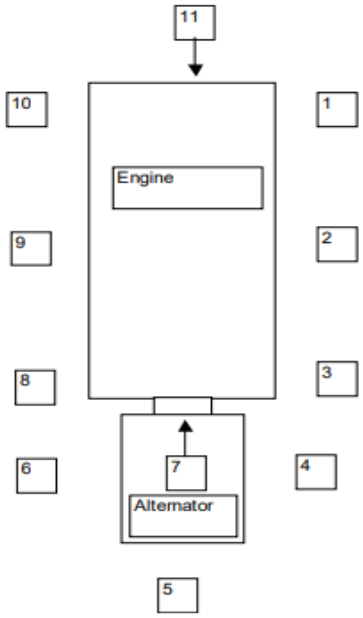

The information given on this Technical Data Sheet is for guidance only. For ratings other than those shown, please contact Perkins Engines Company Limited.

Perkins®
Perkins Engines Company Limited
Peterborough PE1 5NA United Kingdom
Telephone +44 (0) 1733 583000
Fax +44 (0) 1733 582240
www.perkins.com

All information in the document is substantially correct at the time of printing but may be subsequently altered by the company.

Distributed by

Publication No. TPD1689E4. May 2011. © Perkins Engines Company Limited.