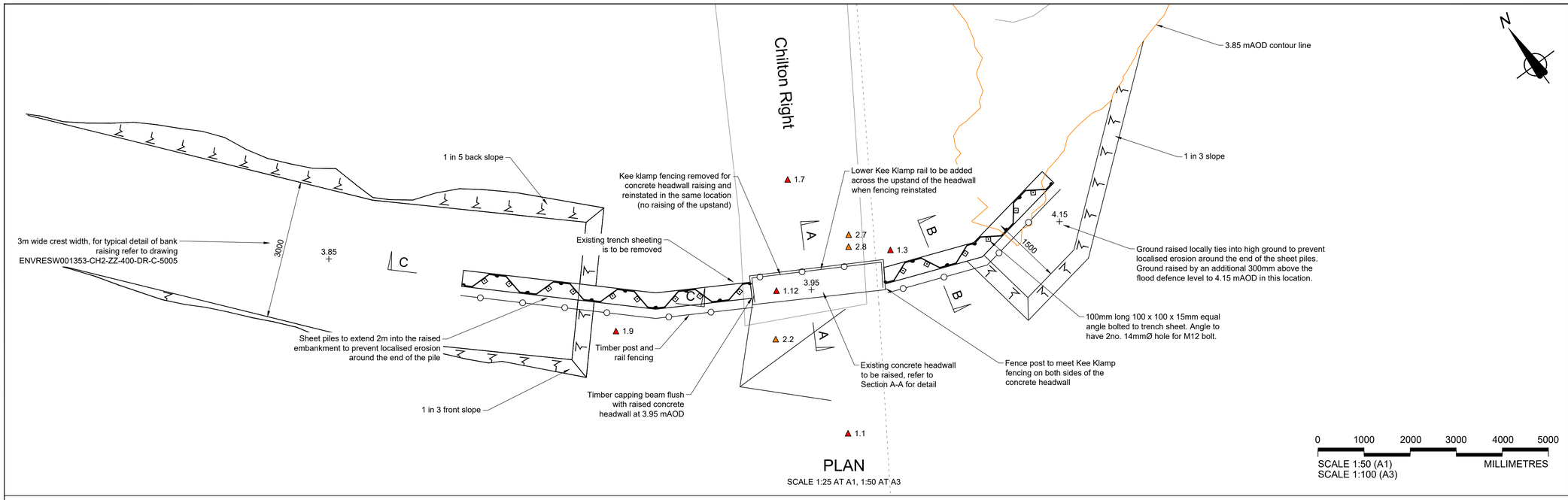

PLAN

SCALE 1:25 AT A1, 1:50 AT A3

0 1000 2000 3000 4000 5000

SCALE 1:50 (A1)
SCALE 1:100 (A3)
MILLIMETRES

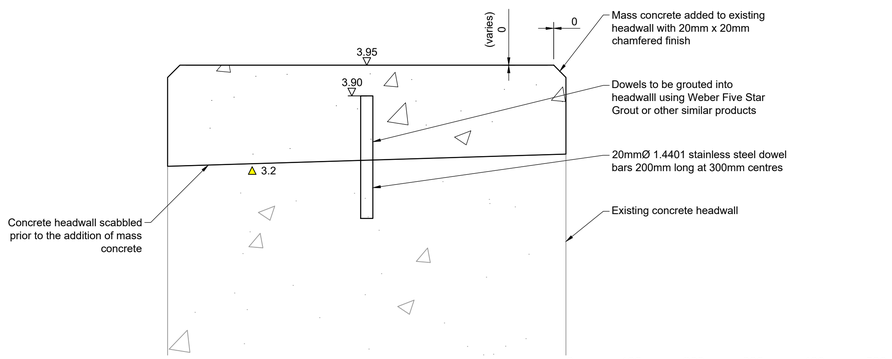

SECTION A - A
PROPOSED HEADWALL

SCALE 1:5 AT A1, 1:10 AT A3

0 100 200 300 400 500

SCALE 1:5 (A1)
SCALE 1:10 (A3)
MILLIMETRES

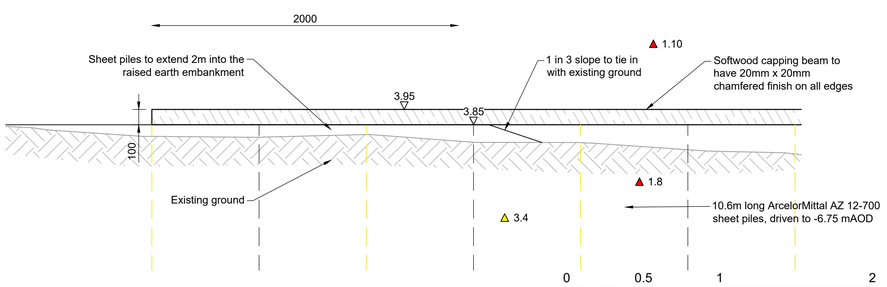

SECTION C - C

SCALE 1:20 AT A1, 1:40 AT A3

0 0.5 1 2

SCALE 1:20 (A1)
SCALE 1:40 (A3)
METRES

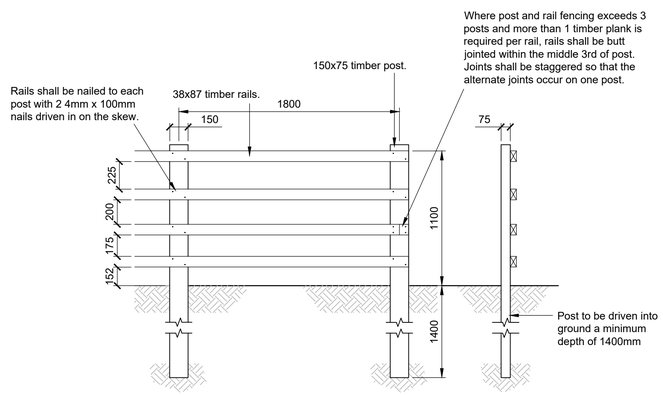

4 RAIL STOCK FENCING

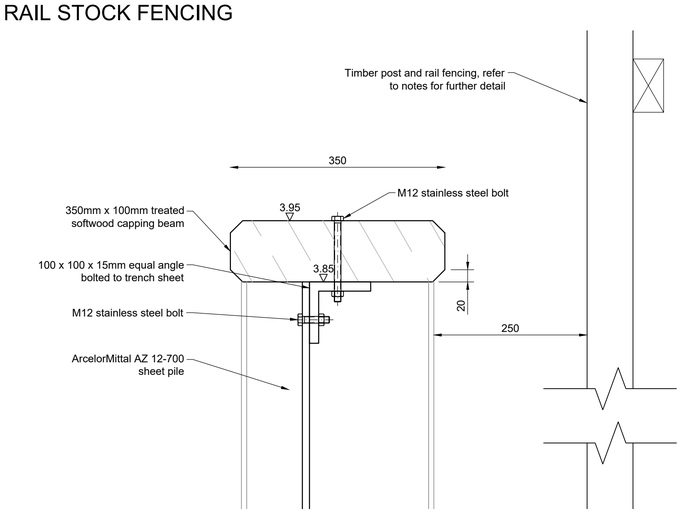

SECTION B - B
PROPOSED SHEET PILES AND TIMBER CAPPING

SCALE 1:5 AT A1, 1:10 AT A3

This map is reproduced from Ordnance Survey© material by Jacobs on behalf of ENVIRONMENT AGENCY with the permission of the Controller of Her Majesty's Stationery Office© Crown copyright. Unauthorised reproduction infringes Crown copyright and may lead to prosecution or civil proceedings.
Licence Number: 100026380

Key Plan:

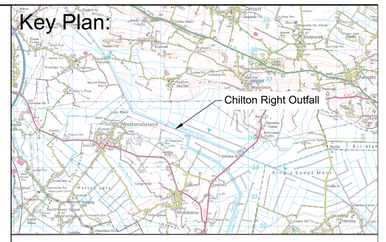

SAFETY, HEALTH AND ENVIRONMENTAL INFORMATION

In addition to the hazards / risks normally associated with the types of work detailed on this drawing, note the following :

CONSTRUCTION:
- 1.1 Flooding
- 1.3 Collapse of channel sides
- 1.7 Pollution to the watercourse
- 1.8 Soft, compressible and wet founding soils
- 1.9 Stability of piling plant
- 1.10 Piling noise
- 1.12 Falls from height

OPERATION AND MAINTENANCE:
- 2.2 Crossing the culvert
- 2.7 Inspection and maintenance of the culvert
- 2.8 Working adjacent to water

DECOMMISSION / DEMOLITION:
- 3.2 Breaking out existing concrete
- 3.4 Demolition of outfall structures

It is assumed that all works will be carried out by a competent contractor working, where appropriate, to an approved method statement.

Notes:

1. All levels are shown in metres Above Ordnance Datum (Newlyn) unless stated otherwise.
2. This drawing to be read in conjunction with all other drawings and specifications associated with this scheme.
3. All dimensions are in millimetres unless stated otherwise.
4. For raised embankment detail refer to drawing ENVRESW001353-CH2-ZZ-400-DR-C-5005
5. Refer to the General Arrangement drawing for the location of the works - ENVRESW001353-CH2-ZZ-4KS-DR-C-2011
6. For Environmental constraints refer to the Landscape Masterplan and the Environmental Action Plan ENVRESW001353-CH2-XX-400-DR-EN-5425-5432

Piles

7. Piling and pile records as per the ICE Specification for Piling and Embedded Retaining Walls (3rd Edition, 2016)
8. 10.6m long AZ 12-700 Sheet Piles, Steel Grade SP270 GP
9. Sheet pile embedment level -6.75 mAOD, top of pile at 3.85 mAOD

Timber Post and Rail Fencing

10. Timber post and rail fencing to conform to BS 1722-7:2006
11. Timber posts to be treated softwood
12. If the posts are not able to be driven into the ground post can be set into ST4 concrete not less than 450mm x 450mm x 600mm deep. Concrete to conform to BS 8500.
13. All nails to be galvanised
14. Fencing should be 2 post and 4 rail. Exact number of post and rails to be determined on site, use indicative plan on the drawing as a guide.

Rev	Rev. Date	Purpose of revision	Drawn	Checkd	Rev'd	Apprv'd
P02	12/08/2020	Following client review	TB	JW	JW	IB
P01	28/05/2020	Client issue for review	TB	SM	SM	IB

JACOBS
Aperture, Pynes Hill Court, Pynes Hill, Exeter EX2 5SP
Tel: +44 (0) 1392 269800
www.jacobs.com

Client: Environment Agency

Project: RIVER SOWY AND KING'S SEDGEMOOR DRAIN ENHANCEMENTS SCHEME: PHASE 1

Drawing title: CHILTON RIGHT OUTFALL DETAILS

Drawing status: S3

Scale	AS SHOWN	DO NOT SCALE
Jacobs No.	B2368000	Rev P02
Client no.	ENVRESW001353	

Drawing number: ENVRESW001353-CH2-XX-4KS-DR-C-2009

© Copyright 2018 Jacobs U.K. Limited. The concepts and information contained in this document are the property of Jacobs. Use or copying of this document in whole or in part without the written permission of Jacobs constitutes an infringement of copyright. Limitation: This drawing has been prepared on behalf of, and for the exclusive use of Jacobs' Client, and is subject to, and issued in accordance with, the provisions of the contract between Jacobs and the Client. Jacobs accepts no liability or responsibility whatsoever for, or in respect of, any use of, or reliance upon, this drawing by any third party.