Appendix 03-01 Engine Specification Sheets

Cat® 3516E
High Power Density (HPD) Diesel Generator Sets

Image shown may not reflect actual configuration.

Bore – mm (in)	170 (6.69)
Stroke – mm (in)	215 (8.46)
Displacement – L (in^3)	78.1 (4766)
Compression Ratio	14.0:1
Aspiration	TA
Fuel System	EUI
Governor Type	ADEM™ A5

Mission Critical 50 Hz kVA (ekW)	Emissions Performance
3000 (2400)	Tier 2 (EPA ESE) with Low NOx (< 2000mg NOx)

Features

Cat® Diesel Engine
- Tier 2 Certified (U.S. EPA Stationary Emergency) with < 2000 mg NOx emissions
- Reliable performance proven in thousands of applications worldwide

Generator Set Package
- Accepts 100% block load in one step
- Meets NFPA 110 loading requirements
- Conforms to ISO 8528-5 G3 load acceptance requirements
- Reliability verified through torsional vibration, fuel consumption, oil consumption, transient performance, and endurance testing

Alternators
- Superior motor starting capability minimizes need for oversizing generator
- Designed to match performance and output characteristics of Cat diesel engines

Cooling System
- Cooling systems available to operate in ambient temperatures up to 50°C (122°F)
- Tested to ensure proper generator set cooling

EMCP 4 Control Panels
- User-friendly interface and navigation
- Scalable system to meet a wide range of installation requirements
- Expansion modules and site specific programming for specific customer requirements

Warranty
- 24 months/1000-hour warranty for standby and mission critical ratings
- 12 months/unlimited hour warranty for prime and continuous ratings
- Extended service protection is available to provide extended coverage options

Worldwide Product Support
- Cat dealers have over 1,800 dealer branch stores operating in 200 countries
- Your local Cat dealer provides extensive post-sale support, including maintenance and repair agreements

Financing
- Caterpillar offers an array of financial products to help you succeed through financial service excellence
- Options include loans, finance lease, operating lease, working capital, and revolving line of credit
- Contact your local Cat dealer for availability in your region

Standard and Optional Equipment

Engine

Air Cleaner
- ■ Single element
- ❑ Dual element

Muffler
- ❑ Industrial grade (15 dB)
- ❑ Critical grade (25 dB)
- ❑ Hospital grade (35 dB)

Starting
- ❑ Standard batteries
- ■ Oversized batteries
- ❑ Standard electric starter(s)
- ■ Dual electric starter(s)
- ❑ Air starter(s)
- ■ Jacket water heater

Alternator

Output voltage
- ■ 400V ❑ 6900V
- ❑ 415V ❑ 10000V
- ❑ 3300V ❑ 10500V
- ❑ 6300V ❑ 11000V
- ❑ 6600V

Temperature Rise (over 40°C ambient)
- ■ 150 °C
- ❑ 125 °C/130 °C

Winding type
- ■ Random wound
- ❑ Form wound

Excitation
- ❑ Internal excitation (IE)
- ❑ Permanent magnet (PM)

Attachments
- ■ Anti-condensation heater
- ■ Stator and bearing temperature monitoring and protection

Power Termination

Type
- ❑ Bus bar
- ❑ Circuit breaker
- ❑ 1600A ❑ 2000A
- ❑ 2500A ❑ 3000A
- ❑ 3200A ❑ 4000A
- ❑ 5000A
- ❑ UL ■ IEC
- ■ 3-pole ❑ 4-pole
- ❑ Manually operated
- ■ Electrically operated

Trip Unit
- ❑ LSI ■ LSI-G
- ❑ LSIG-P

Control System

Controllers
- ■ EMCP 4.2B
- ❑ EMCP 4.3
- ❑ EMCP 4.4

Attachments
- ■ Local annunciator module
- ❑ Remote annunciator module
- ■ Expansion I/O module
- ❑ Remote monitoring software

Charging

- ❑ Battery charger – 10A
- ■ Battery charger – 20A
- ❑ Battery charger – 35A

Vibration Isolators

- ❑ Rubber
- ■ Spring
- ❑ Seismic rated

Cat Connect

Connectivity
- ❑ Ethernet
- ❑ Cellular

Extended Service Options

Terms
- ❑ 2 year (prime)
- ❑ 3 year
- ❑ 5 year
- ❑ 10 year

Coverage
- ❑ Silver
- ❑ Gold
- ❑ Platinum
- ❑ Platinum Plus

Ancillary Equipment

- ❑ Automatic transfer switch (ATS)
- ❑ Paralleling switchgear
- ❑ Paralleling controls

Certifications

- ❑ IBC seismic certification
- ■ EU & GB Declaration of Conformity
- ❑ EU & GB Declaration of Incorporation
- ❑ Eurasian Conformity (EAC)

Note: Some options may not be available on all models. Certifications may not be available with all model configurations. Consult factory for availability.

Package Performance

Performance	Mission Critical	
Frequency	50 Hz	
Gen set power rating with fan	2400 ekW	
Gen set power rating with fan @ 0.8 power factor	3000 kVA	
Emissions	Tier 2 (EPA ESE)	
Performance number	EM6278-01	
Fuel Consumption		
100% load with fan – L/hr (gal/hr)	643.1	(169.9)
75% load with fan – L/hr (gal/hr)	498.0	(131.6)
50% load with fan – L/hr (gal/hr)	344.3	(90.9)
25% load with fan – L/hr (gal/hr)	192.0	(50.7)
Cooling System		
Radiator air flow restriction (system) – kPa (in. water)	0.12	(0.48)
Radiator air flow – m^3/min (cfm)	2879	(101671)
Engine coolant capacity – L (gal)	233.0	(61.6)
Radiator coolant capacity – L (gal)	202.0	(53.4)
Total coolant capacity – L (gal)	435.0	(115.0)
Inlet Air		
Combustion air inlet flow rate – m^3/min (cfm)	207.8	(7336.0)
Exhaust System		
Exhaust stack gas temperature – °C (°F)	495.8	(924.4)
Exhaust gas flow rate – m^3/min (cfm)	545.2	(19249.8)
Exhaust system backpressure (maximum allowable) – kPa (in. water)	6.7	(27.0)
Heat Rejection		
Heat rejection to jacket water – kW (Btu/min)	837	(47625)
Heat rejection to exhaust (total) – kW (Btu/min)	2609	(148361)
Heat rejection to aftercooler – kW (Btu/min)	799	(45434)
Heat rejection to atmosphere from engine – kW (Btu/min)	164	(9307)
Heat rejection from alternator – kW (Btu/min)	104	(5914)
Emissions* (Nominal)		
NOx mg/Nm^3 (g/hp-h)	1755.0	(3.82)
CO mg/Nm^3 (g/hp-h)	372.0	(0.81)
HC mg/Nm^3 (g/hp-h)	12.4	(0.03)
PM mg/Nm^3 (g/hp-h)	23.5	(0.06)
Emissions* (Potential Site Variation)		
NOx mg/Nm^3 (g/hp-h)	1983.2	(4.32)
CO mg/Nm^3 (g/hp-h)	557.9	(1.22)
HC mg/Nm^3 (g/hp-h)	13.3	(0.03)
PM mg/Nm^3 (g/hp-h)	32.9	(0.09)

**mg/Nm^3 levels are corrected to 5% O_2. Contact your local Cat dealer for further information.*

3516E Diesel Generator Sets
High Power Density (HPD)
Electric Power

Weights and Dimensions

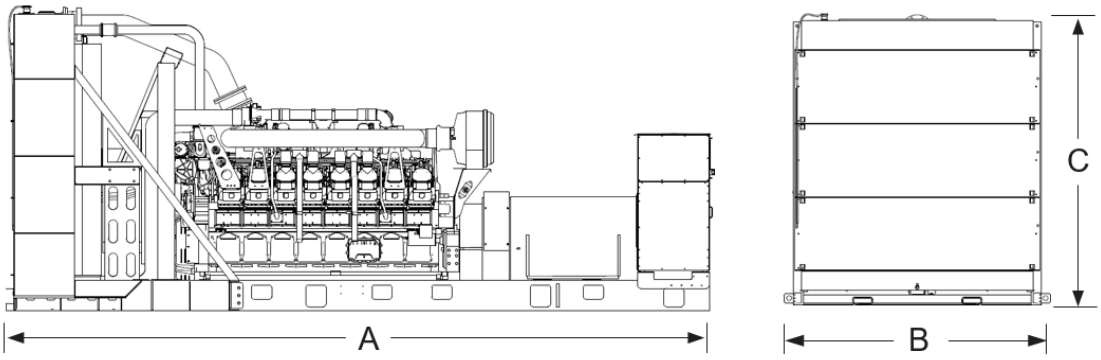

Dim "A" mm (in)	Dim "B" mm (in)	Dim "C" mm (in)	Dry Weight kg (lb)
7735 (304.5)	2640 (104.0)	3342 (131.6)	20 380 (44,930)

Note: *For reference only. Do not use for installation design. Contact your local Cat dealer for precise weights and dimensions.*

Ratings Definitions

Mission Critical

Output available with varying load for the duration of the interruption of the normal source power. Average power output is 85% of the mission critical rated ekW. Typical peak demand up to 100% of rated ekW for up to 5% of the operating time. Typical operation is 200 hours per year, with maximum expected usage of 500 hours per year.

Applicable Codes and Standards

AS 1359, IBC, IEC 60034-1, ISO 3046, ISO 8528, NEMA MG1-22, NEMA MG1-33, 2014/35/EU, 2006/42/EC, 2014/30/EU and facilitates compliance to NFPA 37, NFPA 70, NFPA 99, NFPA 110.

Note: Codes may not be available in all model configurations. Please consult your local Cat dealer for availability.

Data Center Applications

- All ratings Tier III/Tier IV compliant per Uptime Institute requirements.
- All ratings ANSI/TIA-942 compliant for Rated-1 through Rated-4 data centers.

Fuel Rates

Fuel consumption reported in accordance with ISO 3046-1, based on fuel oil of 35º API [16°C (60ºF)] gravity having an LHV of 42,780 kJ/kg (18,390 Btu/lb) when used at 15ºC (59ºF) and weighing 850 g/liter (7.0936 lbs/U.S. gal.) All fuel consumption values refer to rated engine power.

www.cat.com/electricpower
©2022 Caterpillar
All rights reserved.
Materials and specifications are subject to change without notice.
The International System of Units (SI) is used in this publication.
CAT, CATERPILLAR, LET'S DO THE WORK, their respective logos, "Caterpillar Corporate Yellow", the "Power Edge" and Cat "Modern Hex" trade dress as well as corporate and product identity. used herein, are trademarks of Caterpillar and may not be used without permission.

PERFORMANCE DATA[EM4791]

February 26, 2020

Performance Number: EM4791 **Change Level: 02**

SALES MODEL:	3516E	**COMBUSTION:**	DIRECT INJECTION
BRAND:	CAT	**ENGINE SPEED (RPM):**	1,500
ENGINE POWER (BKW):	2,649.0	**HERTZ:**	50
GEN POWER WITH FAN (EKW):	2,400.0	**FAN POWER (KW):**	115.0
COMPRESSION RATIO:	14	**ASPIRATION:**	TA
RATING LEVEL:	STANDBY	**AFTERCOOLER TYPE:**	ATAAC
PUMP QUANTITY:	1	**AFTERCOOLER CIRCUIT TYPE:**	JW+OC, ATAAC
FUEL TYPE:	DIESEL	**INLET MANIFOLD AIR TEMP (C):**	47
MANIFOLD TYPE:	DRY	**JACKET WATER TEMP (C):**	104
GOVERNOR TYPE:	ADEM5	**TURBO CONFIGURATION:**	PARALLEL
ELECTRONICS TYPE:	ADEM5	**TURBO QUANTITY:**	4
IGNITION TYPE:	CI	**TURBOCHARGER MODEL:**	TPX44TV23
INJECTOR TYPE:	MEUI-C	**CERTIFICATION YEAR:**	2020
FUEL INJECTOR:	5816969	**CRANKCASE BLOWBY RATE (M3/HR):**	100.5
UNIT INJECTOR TIMING (MM):	0.88	**FUEL RATE (RATED RPM) NO LOAD (L/HR):**	56.2
REF EXH STACK DIAMETER (MM):	305	**PISTON SPD @ RATED ENG SPD (M/SEC):**	10.8
MAX OPERATING ALTITUDE (M):	1,750		

INDUSTRY	SUBINDUSTRY	APPLICATION
ELECTRIC POWER	STANDARD	PACKAGED GENSET
OIL AND GAS	LAND PRODUCTION	PACKAGED GENSET

General Performance Data

THIS STANDBY RATING IS FOR A STANDBY ONLY ENGINE ARRANGEMENT. RERATING THE ENGINE TO A PRIME OR CONTINUOUS RATING IS NOT PERMITTED.

THE INLET MANIFOLD AIR TEMP LISTED IN THE HEADER, AND IN THE GENERAL PERFORMANCE DATA, IS THE AVERAGE INLET MANIFOLD TEMP FRONT TO REAR ON THE ENGINE.

GENSET POWER WITH FAN	PERCENT LOAD	ENGINE POWER	BRAKE MEAN EFF PRES (BMEP)	BRAKE SPEC FUEL CONSUMPTN (BSFC)	VOL FUEL CONSUMPTN (VFC)	INLET MFLD PRES	INLET MFLD TEMP	EXH MFLD TEMP	EXH MFLD PRES	ENGINE OUTLET TEMP
EKW	%	BKW	KPA	G/BKW-HR	L/HR	KPA	DEG C	DEG C	KPA	DEG C
2,400.0	100	2,649	2,714	208.8	659.4	304.8	47.4	683.9	192.7	492.7
2,160.0	90	2,392	2,451	212.2	605.2	276.9	47.0	674.0	173.8	493.0
1,920.0	80	2,137	2,189	215.8	549.6	244.3	45.7	668.7	152.1	497.3
1,800.0	75	2,010	2,059	218.2	522.7	227.9	45.0	666.9	141.5	500.3
1,680.0	70	1,883	1,930	221.0	496.3	211.6	44.5	666.1	131.2	504.9
1,440.0	60	1,631	1,671	222.0	431.6	158.7	43.3	674.3	99.2	532.7
1,200.0	50	1,378	1,412	216.3	355.4	92.5	42.3	682.7	60.1	567.6
960.0	40	1,126	1,153	217.3	291.5	57.5	42.6	656.0	41.4	561.7
720.0	30	873	894	222.4	231.4	33.6	42.5	601.8	29.3	525.0
600.0	25	747	765	226.0	201.1	22.9	42.1	563.5	24.2	495.9
480.0	20	620	636	231.2	171.0	13.3	41.5	516.9	19.8	458.8
240.0	10	368	377	255.3	111.9	0.1	39.8	394.2	13.6	356.3

GENSET POWER WITH FAN	PERCENT LOAD	ENGINE POWER	COMPRESSOR OUTLET PRES	COMPRESSOR OUTLET TEMP	WET INLET AIR VOL FLOW RATE	ENGINE OUTLET WET EXH GAS VOL FLOW RATE	WET INLET AIR MASS FLOW RATE	WET EXH GAS MASS FLOW RATE	ENGINE OUTLET WET EXH VOL FLOW RATE (0 DEG C AND 101 KPA)	ENGINE OUTLET DRY EXH VOL FLOW RATE (0 DEG C AND 101 KPA)
EKW	%	BKW	KPA	DEG C	M3/MIN	M3/MIN	KG/HR	KG/HR	M3/MIN	M3/MIN
2,400.0	100	2,649	324	228.2	208.6	558.3	14,597.2	15,150.4	199.1	181.9
2,160.0	90	2,392	295	214.4	197.0	521.3	13,635.6	14,142.0	185.9	170.1
1,920.0	80	2,137	261	199.1	181.8	480.7	12,508.9	12,969.7	170.4	156.0
1,800.0	75	2,010	244	191.2	173.9	460.5	11,934.3	12,373.0	162.6	148.9
1,680.0	70	1,883	227	183.2	165.9	441.1	11,358.4	11,775.1	154.8	141.8
1,440.0	60	1,631	171	154.2	138.4	377.4	9,411.2	9,773.6	127.9	116.7
1,200.0	50	1,378	101	112.9	103.0	292.3	6,925.4	7,223.5	94.9	85.9
960.0	40	1,126	65	85.9	84.3	236.3	5,640.3	5,884.9	77.3	69.9
720.0	30	873	40	66.2	71.5	190.7	4,772.3	4,966.5	65.3	59.3
600.0	25	747	28	57.6	65.7	168.6	4,382.4	4,551.2	59.9	54.7
480.0	20	620	18	49.9	60.6	147.3	4,036.3	4,179.8	55.0	50.5
240.0	10	368	4	38.5	53.9	111.4	3,585.6	3,679.2	48.3	45.2

PERFORMANCE DATA[EM4791]

February 26, 2020

Heat Rejection Data

GENSET POWER WITH FAN	PERCENT LOAD	ENGINE POWER	REJECTION TO JACKET WATER	REJECTION TO ATMOSPHERE	REJECTION TO EXH	EXH RECOVERY TO 177C	FROM OIL COOLER	FROM AFTERCOOLER	WORK ENERGY	LOW HEAT VALUE ENERGY	HIGH HEAT VALUE ENERGY
EKW	%	BKW	KW	KW	KW	KW	KW	KW	KW	KW	KW
2,400.0	100	2,649	825	164	2,579	1,421	350	783	2,649	6,574	7,003
2,160.0	90	2,392	770	160	2,418	1,326	321	680	2,392	6,033	6,427
1,920.0	80	2,137	710	158	2,257	1,233	292	573	2,137	5,480	5,837
1,800.0	75	2,010	688	157	2,173	1,188	278	522	2,010	5,211	5,551
1,680.0	70	1,883	669	157	2,088	1,147	264	472	1,883	4,948	5,270
1,440.0	60	1,631	642	160	1,825	1,038	229	324	1,631	4,303	4,583
1,200.0	50	1,378	598	163	1,479	850	189	156	1,378	3,543	3,774
960.0	40	1,126	548	153	1,182	682	155	83.6	1,126	2,906	3,096
720.0	30	873	463	135	941	517	123	44.0	873	2,307	2,457
600.0	25	747	428	124	807	431	107	29.9	747	2,005	2,136
480.0	20	620	393	113	670	348	90.8	18.9	620	1,704	1,816
240.0	10	368	310	91.7	414	190	59.4	5.4	368	1,115	1,188

Emissions Data

RATED SPEED POTENTIAL SITE VARIATION: 1500 RPM

GENSET POWER WITH FAN		EKW	2,400.0	1,800.0	1,200.0	600.0	240.0
PERCENT LOAD		%	100	75	50	25	10
ENGINE POWER		BKW	2,649	2,010	1,378	747	368
TOTAL NOX (AS NO2)		G/HR	15,096	9,527	8,007	6,749	5,814
TOTAL CO		G/HR	3,075	3,063	2,806	1,588	1,129
TOTAL HC		G/HR	147	118	52	104	181
PART MATTER		G/HR	265.4	245.9	204.1	113.5	25.0
TOTAL NOX (AS NO2)	(CORR 5% O2)	MG/NM3	1,937.9	1,547.4	1,919.3	2,875.1	4,451.5
TOTAL CO	(CORR 5% O2)	MG/NM3	389.4	491.6	664.8	671.5	879.6
TOTAL HC	(CORR 5% O2)	MG/NM3	16.1	16.4	10.7	38.5	117.3
PART MATTER	(CORR 5% O2)	MG/NM3	28.0	33.0	39.6	39.9	16.3
TOTAL NOX (AS NO2)	(CORR 5% O2)	PPM	944	754	935	1,400	2,168
TOTAL CO	(CORR 5% O2)	PPM	312	393	532	537	704
TOTAL HC	(CORR 5% O2)	PPM	30	31	20	72	219
TOTAL NOX (AS NO2)		G/HP-HR	4.28	3.55	4.35	6.75	11.80
TOTAL CO		G/HP-HR	0.87	1.14	1.52	1.59	2.29
TOTAL HC		G/HP-HR	0.04	0.04	0.03	0.10	0.37
PART MATTER		G/HP-HR	0.08	0.09	0.11	0.11	0.05
TOTAL NOX (AS NO2)		LB/HR	33.28	21.00	17.65	14.88	12.82
TOTAL CO		LB/HR	6.78	6.75	6.19	3.50	2.49
TOTAL HC		LB/HR	0.32	0.26	0.12	0.23	0.40
PART MATTER		LB/HR	0.59	0.54	0.45	0.25	0.06

RATED SPEED NOMINAL DATA: 1500 RPM

GENSET POWER WITH FAN		EKW	2,400.0	1,800.0	1,200.0	600.0	240.0
PERCENT LOAD		%	100	75	50	25	10
ENGINE POWER		BKW	2,649	2,010	1,378	747	368
TOTAL NOX (AS NO2)		G/HR	13,600	8,583	7,213	6,080	5,238
TOTAL CO		G/HR	2,628	2,618	2,398	1,357	965
TOTAL HC		G/HR	124	100	44	88	153
TOTAL CO2		KG/HR	1,775	1,402	954	535	292
PART MATTER		G/HR	190.9	176.9	146.8	81.7	18.0
TOTAL NOX (AS NO2)	(CORR 5% O2)	MG/NM3	1,745.8	1,394.1	1,729.1	2,590.1	4,010.3
TOTAL CO	(CORR 5% O2)	MG/NM3	332.8	420.1	568.2	574.0	751.8
TOTAL HC	(CORR 5% O2)	MG/NM3	13.7	13.9	9.1	32.6	99.4
PART MATTER	(CORR 5% O2)	MG/NM3	20.1	23.8	28.5	28.7	11.7
TOTAL NOX (AS NO2)	(CORR 5% O2)	PPM	850	679	842	1,262	1,953
TOTAL CO	(CORR 5% O2)	PPM	266	336	455	459	601
TOTAL HC	(CORR 5% O2)	PPM	26	26	17	61	186
TOTAL NOX (AS NO2)		G/HP-HR	3.85	3.20	3.92	6.08	10.63
TOTAL CO		G/HP-HR	0.74	0.98	1.30	1.36	1.96
TOTAL HC		G/HP-HR	0.04	0.04	0.02	0.09	0.31
PART MATTER		G/HP-HR	0.05	0.07	0.08	0.08	0.04

TOTAL NOX (AS NO2)	LB/HR	29.98	18.92	15.90	13.40	11.55
TOTAL CO	LB/HR	5.79	5.77	5.29	2.99	2.13
TOTAL HC	LB/HR	0.27	0.22	0.10	0.19	0.34
TOTAL CO2	LB/HR	3,914	3,091	2,103	1,180	644
PART MATTER	LB/HR	0.42	0.39	0.32	0.18	0.04
OXYGEN IN EXH	%	9.3	9.6	7.8	8.9	12.9
DRY SMOKE OPACITY	%	2.3	2.5	3.1	2.7	0.0
BOSCH SMOKE NUMBER		0.76	0.85	1.10	0.97	0.21

Regulatory Information

EPA EMERGENCY STATIONARY		**2011 - ----**		
GASEOUS EMISSIONS DATA MEASUREMENTS PROVIDED TO THE EPA ARE CONSISTENT WITH THOSE DESCRIBED IN EPA 40 CFR PART 60 SUBPART IIII AND ISO 8178 FOR MEASURING HC, CO, PM, AND NOX. THE "MAX LIMITS" SHOWN BELOW ARE WEIGHTED CYCLE AVERAGES AND ARE IN COMPLIANCE WITH THE EMERGENCY STATIONARY REGULATIONS.				
Locality	**Agency**	**Regulation**	**Tier/Stage**	**Max Limits - G/BKW - HR**
U.S. (INCL CALIF)	EPA	STATIONARY	EMERGENCY STATIONARY	CO: 3.5 NOx + HC: 6.4 PM: 0.20

NON-CERTIFIED 1/2 TA LUFT	**2002 - ----**
GASEOUS EMISSIONS DATA MEASUREMENTS ARE CONSISTENT WITH THOSE DESCRIBED IN ISO 8178 FOR MEASURING HC, CO, PM, AND NOX. THIS ENGINE MEETS EMISSION STANDARDS EQUIVALENT TO 1/2 TA LUFT EMISSION LEVELS.	

Altitude Derate Data

A BLANK IN THE ALTITUDE DERATE TABLE SIGNIFIES THAT NO RATING IS AVAILABLE AT THAT SPECIFIED ALTITUDE AND AMBIENT TEMPERATURE.

THE TEMPERATURES LISTED IN THE CHART ARE AMBIENT TEMPERATURES. THE FOLLOWING DERATE CHART WAS CALCULATED ASSUMING A 5 DEG C RISE IN AIR TEMPERATURE BETWEEN THE AIR CLEANER INLET, AND THE TURBOCHARGER INLET.

ALTITUDE CORRECTED POWER CAPABILITY (BKW)

AMBIENT OPERATING TEMP (C)	**0**	**5**	**10**	**15**	**20**	**25**	**30**	**35**	**40**	**45**	**50**	**55**	**60**	**NORMAL**
ALTITUDE (M)														
0	2,649	2,649	2,649	2,649	2,649	2,649	2,649	2,649	2,649	2,649	2,649			2,649
250	2,649	2,649	2,649	2,649	2,649	2,649	2,649	2,649	2,649	2,649				2,649
500	2,649	2,649	2,649	2,649	2,649	2,649	2,649	2,649	2,649	2,649				2,649
750	2,649	2,649	2,649	2,649	2,649	2,649	2,649	2,649	2,649	2,649				2,649
1,000	2,649	2,649	2,649	2,649	2,649	2,649	2,649	2,649	2,649	2,387				2,649
1,250	2,649	2,649	2,649	2,649	2,649	2,649	2,649	2,649	2,649					2,649
1,500	2,649	2,649	2,649	2,649	2,649	2,649	2,649	2,649	2,630					2,649
1,750	2,649	2,649	2,649	2,649	2,649	2,649	2,634	2,617	2,572					2,649
2,000	2,649	2,649	2,629	2,614	2,597	2,580	2,562	2,458	2,351					2,624
2,250	2,621	2,604	2,585	2,561	2,532	2,501	2,470	2,324	2,100					2,586
2,500	2,552	2,531	2,501	2,469	2,436	2,408	2,381	2,216	1,983					2,509
2,750	2,469	2,438	2,409	2,381	2,352	2,325	2,299	2,129	1,888					2,429
3,000	2,381	2,354	2,326	2,300	2,273	2,246	2,218	2,033	1,789					2,354
3,250	2,299	2,273	2,246	2,221	2,195	2,163	2,122	1,935	1,675					2,280
3,500	2,217	2,190	2,163	2,139	2,109	2,058	2,006	1,839	1,565					2,208
3,750	2,145	2,113	2,080	2,054	2,026	1,970	1,913	1,733	1,522					2,142
4,000	2,062	2,035	2,007	1,982	1,955	1,894	1,808	1,622	1,520					2,066
4,250	1,993	1,969	1,945	1,921	1,896	1,827	1,700	1,547	1,509					1,999
4,500	1,934	1,912	1,890	1,869	1,848	1,745	1,596	1,547	1,490					1,943

Cross Reference

Test Spec	**Setting**	**Engine Arrangement**	**Engineering Model**	**Engineering Model Version**	**Start Effective Serial Number**	**End Effective Serial Number**
5643870	GG2111	5838330	PG356	XJ	WYH00001	
5643855	LL2847	5930146	PG296	-	ZNL00001	

Supplementary Data

PERFORMANCE DATA[EM4791]

February 26, 2020

Type	Classification	Performance Number
MULTIPLE FUEL	EN590 FUEL	EM5179
ALTITUDE DATA	HIGH RESOLUTION	EM5384

Performance Parameter Reference

Parameters Reference:DM9600-11

PERFORMANCE DEFINITIONS

PERFORMANCE DEFINITIONS DM9600
APPLICATION:
Engine performance tolerance values below are representative of a typical production engine tested in a calibrated dynamometer test cell at SAE J1995 standard reference conditions. Caterpillar maintains ISO9001:2000 certified quality management systems for engine test Facilities to assure accurate calibration of test equipment. Engine test data is corrected in accordance with SAE J1995. Additional reference material SAE J1228, J1349, ISO 8665, 3046-1:2002E, 3046-3:1989, 1585, 2534, 2288, and 9249 may apply in part or are similar to SAE J1995. Special engine rating request (SERR) test data shall be noted.
PERFORMANCE PARAMETER TOLERANCE FACTORS:
Power +/- 3%
Torque +/- 3%
Exhaust stack temperature +/- 8%
Inlet airflow +/- 5%
Intake manifold pressure-gage +/- 10%
Exhaust flow +/- 6%
Specific fuel consumption +/- 3%
Fuel rate +/- 5%
Specific DEF consumption +/- 3%
DEF rate +/- 5%
Heat rejection +/- 5%
Heat rejection exhaust only +/- 10%
Heat rejection CEM only +/- 10%
Heat Rejection values based on using treated water.
Torque is included for truck and industrial applications, do not use for Gen Set or steady state applications.
On C7 - C18 engines, at speeds of 1100 RPM and under these values are provided for reference only, and may not meet the tolerance listed.
These values do not apply to C280/3600. For these models, see the tolerances listed below.
C280/3600 HEAT REJECTION TOLERANCE FACTORS:
Heat rejection +/- 10%
Heat rejection to Atmosphere +/- 50%
Heat rejection to Lube Oil +/- 20%
Heat rejection to Aftercooler +/- 5%
TEST CELL TRANSDUCER TOLERANCE FACTORS:
Torque +/- 0.5%
Speed +/- 0.2%
Fuel flow +/- 1.0%
Temperature +/- 2.0 C degrees
Intake manifold pressure +/- 0.1 kPa
OBSERVED ENGINE PERFORMANCE IS CORRECTED TO SAE J1995 REFERENCE AIR AND FUEL CONDITIONS.
REFERENCE ATMOSPHERIC INLET AIR
FOR 3500 ENGINES AND SMALLER
SAE J1228 AUG2002 for marine engines, and J1995 JAN2014 for other engines, reference atmospheric pressure is 100 KPA (29.61 in hg), and standard temperature is 25deg C (77 deg F) at 30% relative humidity at the stated aftercooler water temp, or inlet manifold temp.
FOR 3600 ENGINES
Engine rating obtained and presented in accordance with ISO 3046/1 and SAE J1995 JANJAN2014 reference atmospheric pressure is 100 KPA (29.61 in hg), and standard temperature is 25deg C (77 deg F) at 30% relative humidity and 150M altitude at the stated aftercooler water temperature.
MEASUREMENT LOCATION FOR INLET AIR TEMPERATURE
Location for air temperature measurement air cleaner inlet at stabilized operating conditions.
REFERENCE EXHAUST STACK DIAMETER
The Reference Exhaust Stack Diameter published with this dataset is only used for the calculation of Smoke Opacity values displayed in this dataset. This value does not necessarily represent the actual stack diameter of the engine due to the variety of exhaust

stack adapter options available. Consult the price list, engine order or general dimension drawings for the actual stack diameter size ordered or options available.

REFERENCE FUEL

DIESEL

Reference fuel is #2 distillate diesel with a 35API gravity; A lower heating value is 42,780 KJ/KG (18,390 BTU/LB) when used at 29 deg C (84.2 deg F), where the density is 838.9 G/Liter (7.001 Lbs/Gal).

GAS

Reference natural gas fuel has a lower heating value of 33.74 KJ/L (905 BTU/CU Ft). Low BTU ratings are based on 18.64 KJ/L (500 BTU/CU FT) lower heating value gas. Propane ratings are based on 87.56 KJ/L (2350 BTU/CU Ft) lower heating value gas.

ENGINE POWER (NET) IS THE CORRECTED FLYWHEEL POWER (GROSS) LESS EXTERNAL AUXILIARY LOAD

Engine corrected gross output includes the power required to drive standard equipment; lube oil, scavenge lube oil, fuel transfer, common rail fuel, separate circuit aftercooler and jacket water pumps. Engine net power available for the external (flywheel) load is calculated by subtracting the sum of auxiliary load from the corrected gross flywheel out put power. Typical auxiliary loads are radiator cooling fans, hydraulic pumps, air compressors and battery charging alternators. For Tier 4 ratings additional Parasitic losses would also include Intake, and Exhaust Restrictions.

ALTITUDE CAPABILITY

Altitude capability is the maximum altitude above sea level at standard temperature and standard pressure at which the engine could develop full rated output power on the current performance data set.

Standard temperature values versus altitude could be seen on TM2001.

When viewing the altitude capability chart the ambient temperature is the inlet air temp at the compressor inlet.

Engines with ADEM MEUI and HEUI fuel systems operating at conditions above the defined altitude capability derate for atmospheric pressure and temperature conditions outside the values defined, see TM2001.

Mechanical governor controlled unit injector engines require a setting change for operation at conditions above the altitude defined on the engine performance sheet. See your Caterpillar technical representative for non standard ratings.

REGULATIONS AND PRODUCT COMPLIANCE

TMI Emissions information is presented at 'nominal' and 'Potential Site Variation' values for standard ratings. No tolerances are applied to the emissions data. These values are subject to change at any time. The controlling federal and local emission requirements need to be verified by your Caterpillar technical representative.

Customer's may have special emission site requirements that need to be verified by the Caterpillar Product Group engineer.

EMISSION CYCLE LIMITS:

Cycle emissions Max Limits apply to cycle-weighted averages only. Emissions at individual load points may exceed the cycle-weighted limit.

EMISSIONS DEFINITIONS:

Emissions : DM1176

EMISSION CYCLE DEFINITIONS

1. For constant-speed marine engines for ship main propulsion, including,diesel-electric drive, test cycle E2 shall be applied, for controllable-pitch propeller sets test cycle E2 shall be applied.
2. For propeller-law-operated main and propeller-law-operated auxiliary engines the test cycle E3 shall be applied.
3. For constant-speed auxiliary engines test cycle D2 shall be applied.
4. For variable-speed, variable-load auxiliary engines, not included above, test cycle C1 shall be applied.

HEAT REJECTION DEFINITIONS:

Diesel Circuit Type and HHV Balance : DM9500

HIGH DISPLACEMENT (HD) DEFINITIONS:

3500: EM1500

RATING DEFINITIONS:

Agriculture : TM6008
Fire Pump : TM6009
Generator Set : TM6035
Generator (Gas) : TM6041
Industrial Diesel : TM6010
Industrial (Gas) : TM6040
Irrigation : TM5749
Locomotive : TM6037
Marine Auxiliary : TM6036
Marine Prop (Except 3600) : TM5747
Marine Prop (3600 only) : TM5748
MSHA : TM6042
Oil Field (Petroleum) : TM6011
Off-Highway Truck : TM6039

PERFORMANCE DATA[EM4791]

On-Highway Truck : TM6038
SOUND DEFINITIONS:
Sound Power : DM8702
Sound Pressure : TM7080
Date Released : 07/10/19

NOxMASTER™ BlueJet S30_50 overview

Revision	Issue Date	Summary of Changes
0.1	30.03.2023	first release

Legend

Title	Page
Title and content	01
System and fuel data	02
Site layout	03
NOxMASTER™	04
Cables	05
Hoses	06
NOC Outter cabinet (under progress)	07
NCC Control Cabinet Layout	08
Connectors NCC NOxMASTER™	09
DPC Dosing Pump Cabinet Layout	10
VP Valve Plate	11
Injector	12
NOx Sensor	13
Temperature Sensor	14
Pressure transmitter	15
Do’s and Don’ts	16

UNDER PROGRESS, waiting for Client release

Vers. | Vers. | Drawn by 30.03.2023 / B. Wälti | Approved by | Standard | Released | Scale

Part. List on Drawing | Sep. Part. List same Drawing | Sep. Part. List Drawing No.....

Page / Title: Title and content

Status | Project: P2320 LON 14_1 | Pages: 16 | Page: 1

metric: mm

AGRIEMACH LTD

Title: NOxMASTER™ BlueJet S30_50 overview | Drawing No.: 3505 P2320 | Revision: rev 0.1

This document is entrusted to the recipient personally. The copyright remains with Agriemach Ltd. Recipients must obtain written authority of the said company before wholly or partly use or duplicating the contents or disclosing same to others. All rights reserved.

Agriemacht Ltd, Wayfarers, Old Domewood, Copthorne, West Sussex, RH10 3HD

1	2	3	4	5	6	7	8	9	10

System data

Engine	Caterpillar 3516E	
Engine power	2’400	kW
Exhaust gas mass flow	15'150.4	kg/h (@100% load)
Exhaust gas temperature	492.7	°C (max. Temperature catalyst 500°C, short term 510°C, min temp catalyst 420°C)
NOx after engine @100%ESP	<= 1’745.8	$mg/mn^3@5\%O_2$
NOx Limit to achieve	<86	$mg/mn^3@5\%O_2$
Noise level after silencer	* change in noise reduction to below limits given by email 06.02.2023 63Hz 100dB // 125Hz 90dB // 250Hz 85dB... Noise reduction acc. Datasheet “3516E Standby 3000kVA”	
fuel	Ultra-low sulphur diesel (EN590)	

Modbus:

40001 NOx In ppm
40002 O2 IN Promil (multiply by 10 to get to percent)
40003 NOx Out ppm
40004 O2 OUT Promil

Adresses (NOxMASTER as Slave):
tbd

UNDER PROGRESS, waiting for Client release

40013 Backpressure 1
40014 Backpressure 2
40015 Backpressure 3

40016 Temperature 1
40017 Temperature 2
40018 Temperature 3

40029 Relais State (as digital signal, please use that , careful about high Bit Low Bit)
Bit0 /8 Engine Off Relais
Bit1 /9 Failure Relais
Bit2 /10 Warning Relais (here we got the Daytank low and others)

(Bit 8/ 0 is a blinker, so you see if you are reading high or low bit)

To calculate from ppm to mg/Nm3@5% O2 :

Calculation :
[Value ppm]*2.054*(21-5)/(21-[Actual O2 in %]) = [NOxValue in mg/Nm3@5%O2]

We have « upped » all registers by 1, since we start at 0, but you seem to be reading starting at 1
(for us, the Relais state would be 40028 for example)

Vers.		Vers.		Drawn by	30.03.2023 / B. Wälti
				Approved by	
				Standard	
				Released	
Part. List on Drawing	Page / Title			Status	
Sep. Part. List same Drawing	System and fuel data			Project P2320 LON 14_1	Pages 16
Sep. Part. List Drawing No.....					Page 2
AGRIEMACH LTD	Title NOxMASTER™ BlueJet S30_50 overview			Drawing No. 3505 P2320	Revision rev 0.1

Scale
metric: mm

This document is entrusted to the recipient personally. The copyright remains with Agriemach Ltd. Recipients must obtain written authority of the said company before wholly or partly use or duplicating the contents or disclosing same to others. All rights reserved.

Agriemacht Ltd, Wayfarers, Old Domewood, Copthorne, West Sussex, RH10 3HD

UNDER PROGRESS, waiting for Client release

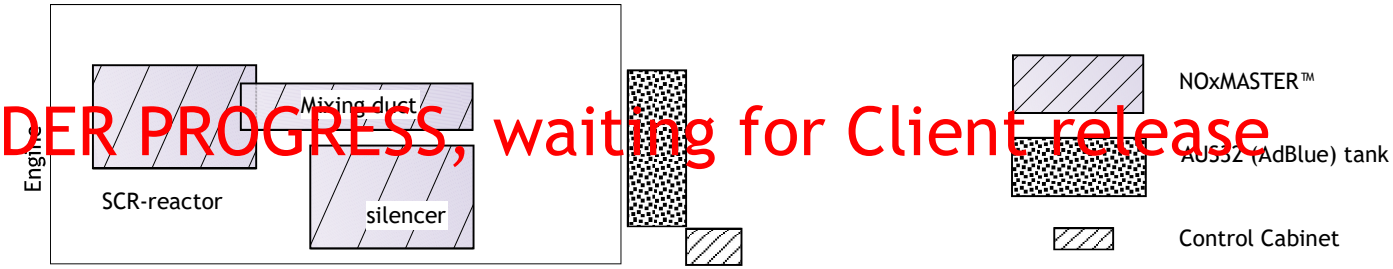

under progress, currently as per drawing 16125_B, waiting for client release

Vers.		Vers.		Drawn by	30.03.2023 / B. Wälti
				Approved by	
				Standard	
				Released	
Part. List on Drawing		Page / Title		Status	
Sep. Part. List same Drawing		Site Layout		Project	P2320 LON 14_1
Sep. Part. List Drawing No.....				Pages	16
AGRIEMACH LTD		Title	NOxMASTER™ BlueJet S30_50 overview	Drawing No.	3505 P2320

Scale: metric: mm

Page: 3

Revision: rev 0.1

This document is entrusted to the recipient personally. The copyright remains with Agriemach Ltd. Recipients must obtain written authority of the said company before wholly or partly use or duplicating the contents or disclosing same to others. All rights reserved.

Agriemacht Ltd, Wayfarers, Old Domewood, Copthorne, West Sussex, RH10 3HD

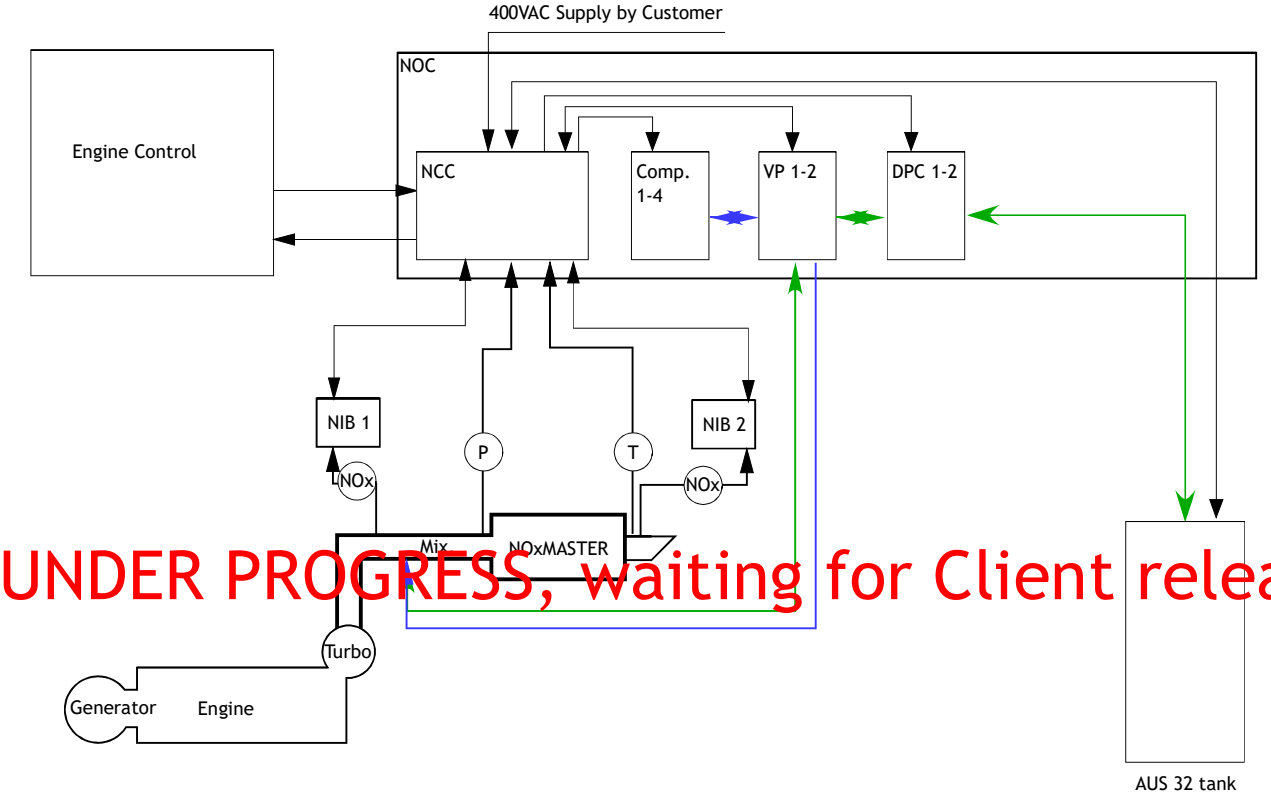

NOC = NOxMASTER™ Outer Cabinet
NCC = NOxMASTER™ Control Cabinet
DPC = Dosing Pump Cabinet
NIB = NOxMASTER™ Instrument Box
VP = Valve Plate
Comp. = Compressors

(T) = Temperature Sensor
(P) = Back Pressure Sensor
(NOx) = NOxSensor
(LS) = Level Switch Low

UNDER PROGRESS, waiting for Client release

electrical cabling
Type/ size as indicated and according to local laws

Air piping
Material: steel/ PVC/ PVDF
size as indicated and according to local laws

Urea piping
Material: stainless steel/ PVC/ PVDF
size as indicated and according to local laws

Vers.		Drawn by	30.03.2023 / B. Wälti
		Approved by	
		Standard	
		Released	
Part. List on Drawing	Page / Title	Status	
Sep. Part. List same Drawing	NOxMASTER™	Project	P2320 LON 14_1
Sep. Part. List Drawing No.....		Pages	16
AGRIEMACH LTD	Title: NOxMASTER™ BlueJet S30_50 overview	Drawing No.	3505 P2320
		Revision	rev 0.1
Scale	metric: mm	Page	4

This document is entrusted to the recipient personally. The copyright remains with Agriemach Ltd. Recipients must obtain written authority of the said company before wholly or partly use or duplicating the contents or disclosing same to others. All rights reserved.

Agriemacht Ltd, Wayfarers, Old Domewood, Copthorne, West Sussex, RH10 3HD

Appendix 03-02 Electrical Supply Arrangement

Do Not Scale

No. DESCRIPTION

1. HV SWITCHBOARD SUPPLY FROM STOCKLY PARK TO BE DESIGNED & INSTALLED BY OTHERS.
2. DAY 1: CABLE LINK TO BE INSTALLED WITH HVA/HVC1 & HVB/HVC2 BOARDS OPERATING COMPLETELY ISOLATED. HVC1/HVC2 TO BE INTERLINKED & OPERATING AS ONE. DAY 2 (BY OTHERS): CABLE LINK BETWEEN HVA/HVC1 & HVB/HVC2 TO BE ENERGISED WITH HVC1-HVC2 LINK TO BE DECOMMISSIONED.
3. CABLE CONNECTION BETWEEN C1 AND C2 SWITCHBOARDS TO BE CONFIRMED RUN IN TRENCH.
4. RING FEEDER CABLES TO BE CONFIRMED.
5. HV RELAYS TO BE PROGRAMMED TO ALLOW OUTGOING BREAKERS TO IMMEDIATELY OPEN ON "DEAD BUSBAR", ON "LIVE BUSBAR" i.e. RETURN OF MAINS, THE OUTGOING BREAKER SHALL SEQUENTIALLY CLOSE WITH 3 SECOND INTERVALS.
6. FUTURE HV SWITCHBOARD SUPPLIES TO BE DESIGNED & INSTALLED BY OTHERS.
7. PAN TO TX CABLE SIZE TO BE CONFIRMED.
8. CABLE CONNECTION BETWEEN HVA/HVC1 & HVB/HVC2 RUN IN TRENCH TO BE DESIGNED AND INSTALLED BY OTHERS.

Safety, Health and Environmental Information.

In Addition to the Hazards / Risks normally associated with the Types of Work indicated on this drawing, Note the Following.

Construction

1. **Live Water Services will be present within the Site Boundary and shall be fully identified and protected.**
2. **Live Gas Services will be present within the Site Boundary and shall be fully identified and protected.**
3. **Live Electrical Services will be present within the Site Boundary and shall be fully identified and protected.**
4. **Live Sprinkler Pipe Services will be present within the Site Boundary and shall be fully identified and protected.**
5. **Cable Spacing to be as per calculations**

Maintenance & Cleaning

Decommissioning & Demolition

LEGEND

○ OPEN CASTELL KEY SWITCH

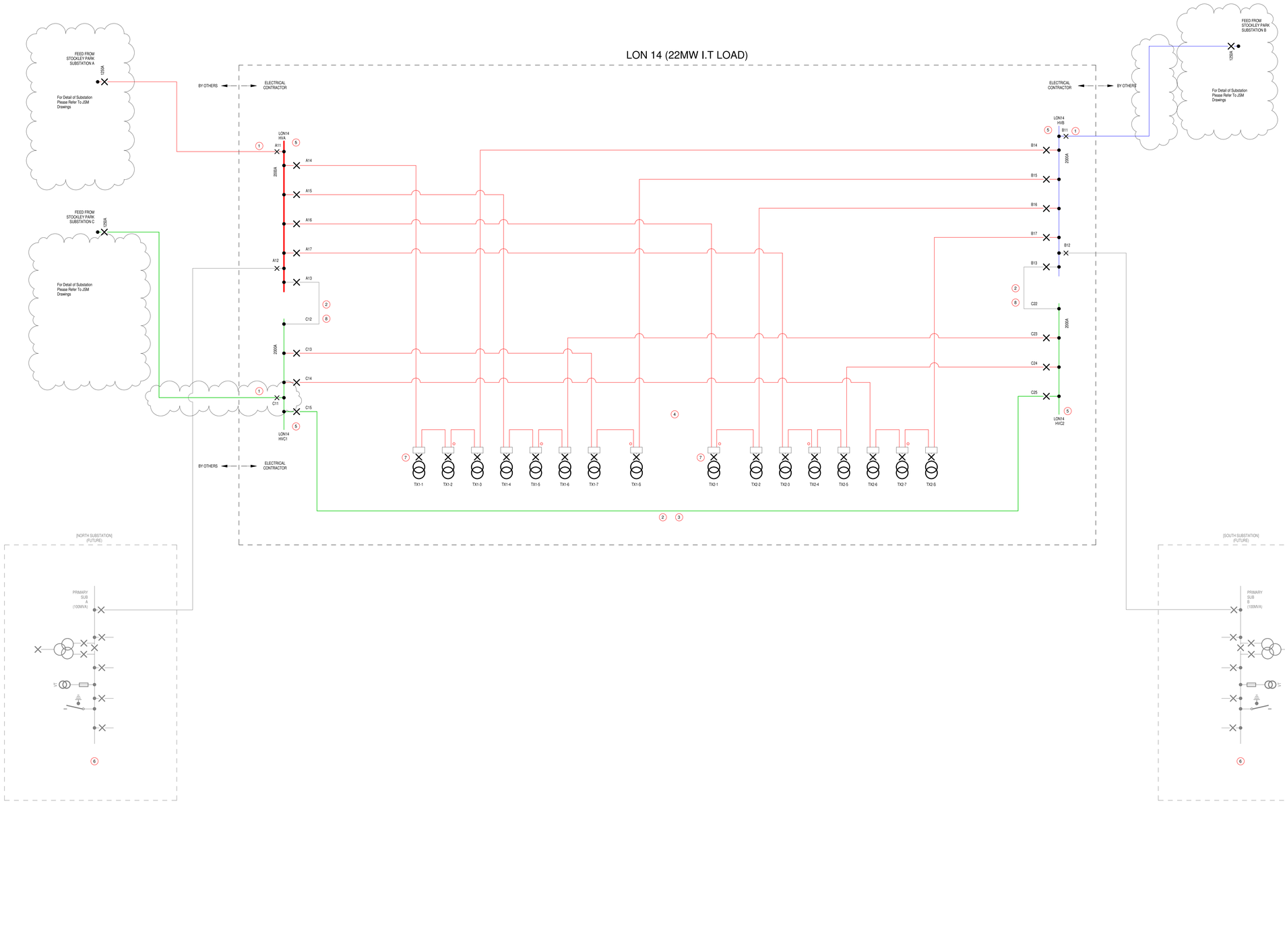

REV	DATE	BY	DESCRIPTION	CHK	APP
C01	09/08/23	SH	CABLE AMENDED & CONNECTION ADDED & NOTES ADDED	FA	PJ
P01	25/05/23	ZM	PRELIMINARY ISSUE	FA	PJ

THIS DRAWING IS PRIVATE AND CONFIDENTIAL AND IS THE PROPERTY OF BOUYGUES E+S. IT MUST NOT BE COPIED OR USED WITHOUT THE CONSENT OF BOUYGUES E+S, AND MUST BE RETURNED WHEN THAT AND/OR ON COMPLETION OF WORKS

BOUYGUES ENERGIES & SERVICES

One Didsbury Point, 2 The Avenue
Manchester, M20 2EY. UK
Tel: +44 (0)161 249 1000

Excel House, Europoint Office Park, 1 Renshaw Place Holytown, Motherwell, ML1 4UF. UK
Tel: +44 (0)1698 855 300

Becket House, 1 Lambeth Palace Road,
London, SE1 7EU. UK
Tel: +44 (0)207 401 0020

Client
VIRTUS

Project
LONDON 14

Drawing Title
HV OVERVIEW SCHEMATIC

Construction

Drawn	Designed	Date
ZM	FA	25/05/2023
Checked	Approved	Scale
FA	PJ	NTS

A0

Byes Project No.: 551060

Drawing No.: LON14-BYES-XX-XX-ST-E-600901

Revision: C01

Project	Originator	Zone	Level	Type	Discip.	Seq. number

No.	DESCRIPTION
1	3200A IT SWING BUSBAR.
2	LANDLORD PANELBOARD (ACTIVE).
3	3.15 MVA MIDEL 7131 FILLED HERMITICALLY SEALED TRANSFORMER.
4	3 MVA DATA CENTRE POWER RATED GENERATOR.
5	GENERATOR LOADBANK BREAKER.
6	MECH UPS PANELBOARD (SWING).
7	SWING SECONDARY PUMP.
8	6 x 630A MCCB's FOR PDU SUPPLIES.
9	CONTRACTOR SHALL ADD TO LABELLING STRATEGY, DETAILED TO INDICATE FINAL LOCATION OF ACTIVE AND SWING DB's
10	MECH UPS.
11	CDB. REFER TO DETAILED SCHEMATIC FOR OTHER SERVICES.
12	NUMBER OF CRACS PER POWER STREAM INDICATED INCLUDES REDUNDANT UNITS FOR MAIN LV INCOMER ROOM/ DATA HALLS / UPS SWITCHROOMS RESPECTIVELY
13	UPS MODULES POPULATED TO 150kW & BATTERIES POPULATED TO 150kW, SWITCHGEAR AND CABLING RATED FOR FULL UPS LOAD

GENERAL NOTES

- DO NOT SCALE. VERIFY ALL DIMENSIONS BY SITE MEASUREMENT.
- THIS DRAWING IS TO BE READ IN CONJUNCTION WITH ALL RELEVANT DRAWINGS AND SPECIFICATIONS.
- THIS DRAWING SHOW A TYPICAL 6+1 LV SYSTEM GROUP ARRANGEMENT. THERE ARE 3NO (6+1) LV SYSTEM IN TOTAL + A SEPRATE DEDICATED LANLORD SYSTEM

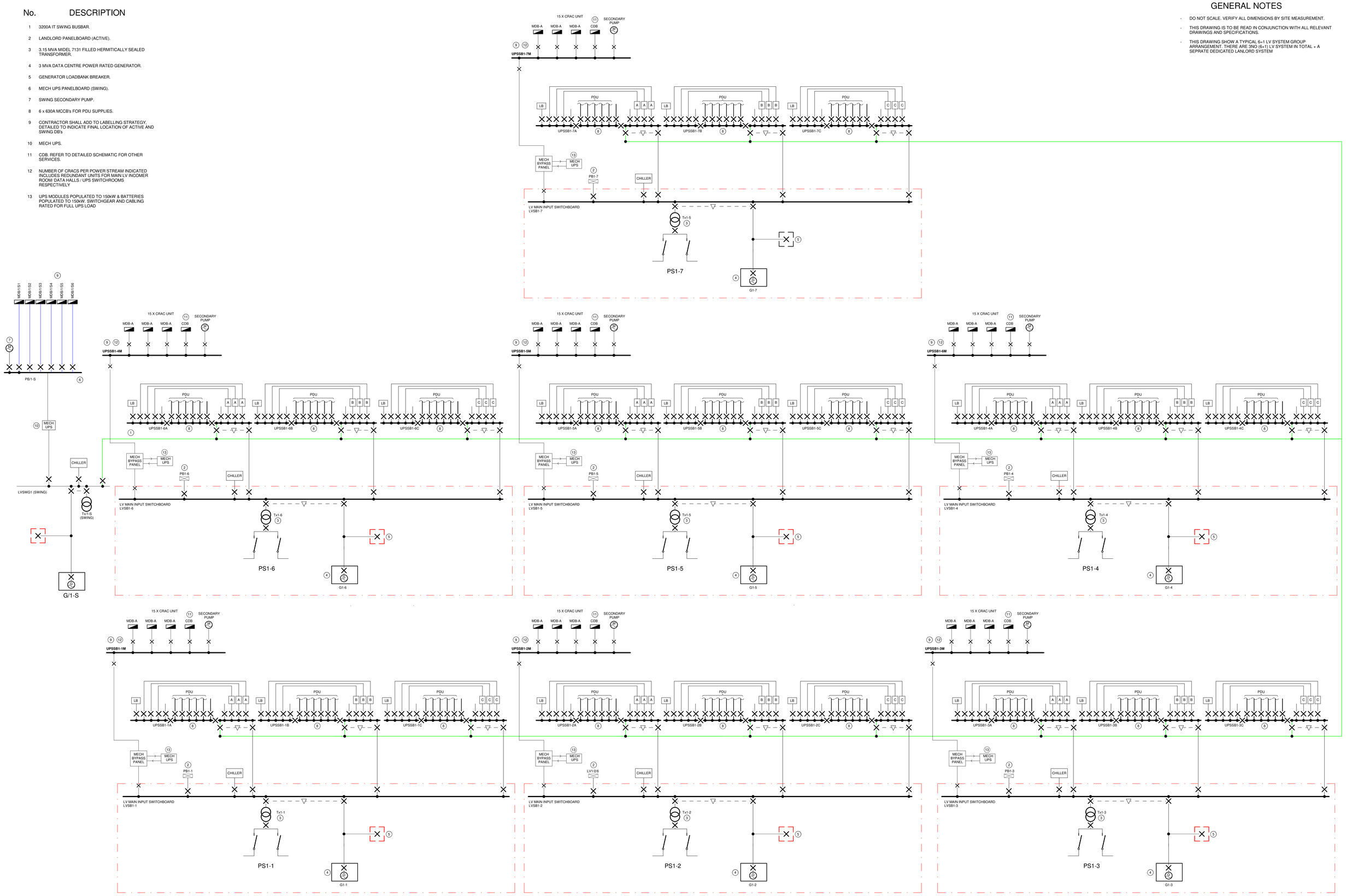

Rev	Description	Date	Rev	Description	Date	Rev	Description	Date	Rev	Description	Date	Rev	Description	Date
P01	WORK IN PROGRESS	05.08.22												

CDM NOTES

DURING THE DESIGN PHASE, CONSIDERATION HAS BEEN GIVEN TO SITE SPECIFIC HAZARD IDENTIFICATION. A SCHEDULE OF CDM RISK ITEMS IS INCLUDED WITHIN THESE DOCUMENTS HOWEVER IT SHOULD BE NOTED THAT ONLY SIGNIFICANT AND UNUSUAL RISKS HAVE BEEN IDENTIFIED. THE CONTRACTOR MUST CARRY OUT THEIR OWN RISK ASSESSMENT AS OTHER UNIDENTIFIED RISKS MAY EXIST. WHERE RISK(S) HAVE BEEN IDENTIFIED ON THIS DRAWING PLEASE REFER TO THE CDM SCHEDULE LOCATED ON THE LEGEND SHEET FOR DETAILS

NDY QA SYSTEM
Reason For Issue: STAGE 4
Authorisation
By: KB : 05 AUG 2022
Verification Of Latest Amendment
By: KB : 05 AUG 2022

Norman Disney & Young
A TETRA TECH COMPANY
CONSULTING ENGINEERS
1 ANGEL COURT
LONDON EC2R 7HJ
UNITED KINGDOM
T +44 207 553 9494
F +44 207 553 9499
www.ndy.com
NDY Consulting Ltd
A registered company in England & Wales
Company Registration No. 3890617

This drawing is diagrammatic and shows the general arrangement of equipment. Any information involving measurement of the works shall be taken from architectural and structural drawings, workshop drawings by others and conditions at the site. The works shall comply with the contract conditions and Statutory Regulations. Copyright © NDY Management Pty Limited.

Project: VIRTUS LONDON14

Title: ELECTRICAL SERVICES
LV POWER STREAM OVERVIEW SCHEMATIC

Drawing No.: VL14-NDY-XX-XX-SC-E-3808

Revit Version: 2022
DRAWING IN COLOUR

Scale	Drawn	Design	Revision
As indicated @ A0	ICE	AP	P01

Project No.: U14633-002
Project Commencement: JUN. 2022

A0 10 20 30 40 50 60 70 80 90 100 110 120 130 140 150 When reproduced at correct scale this line measures 150mm

Appendix 03-03 Drainage

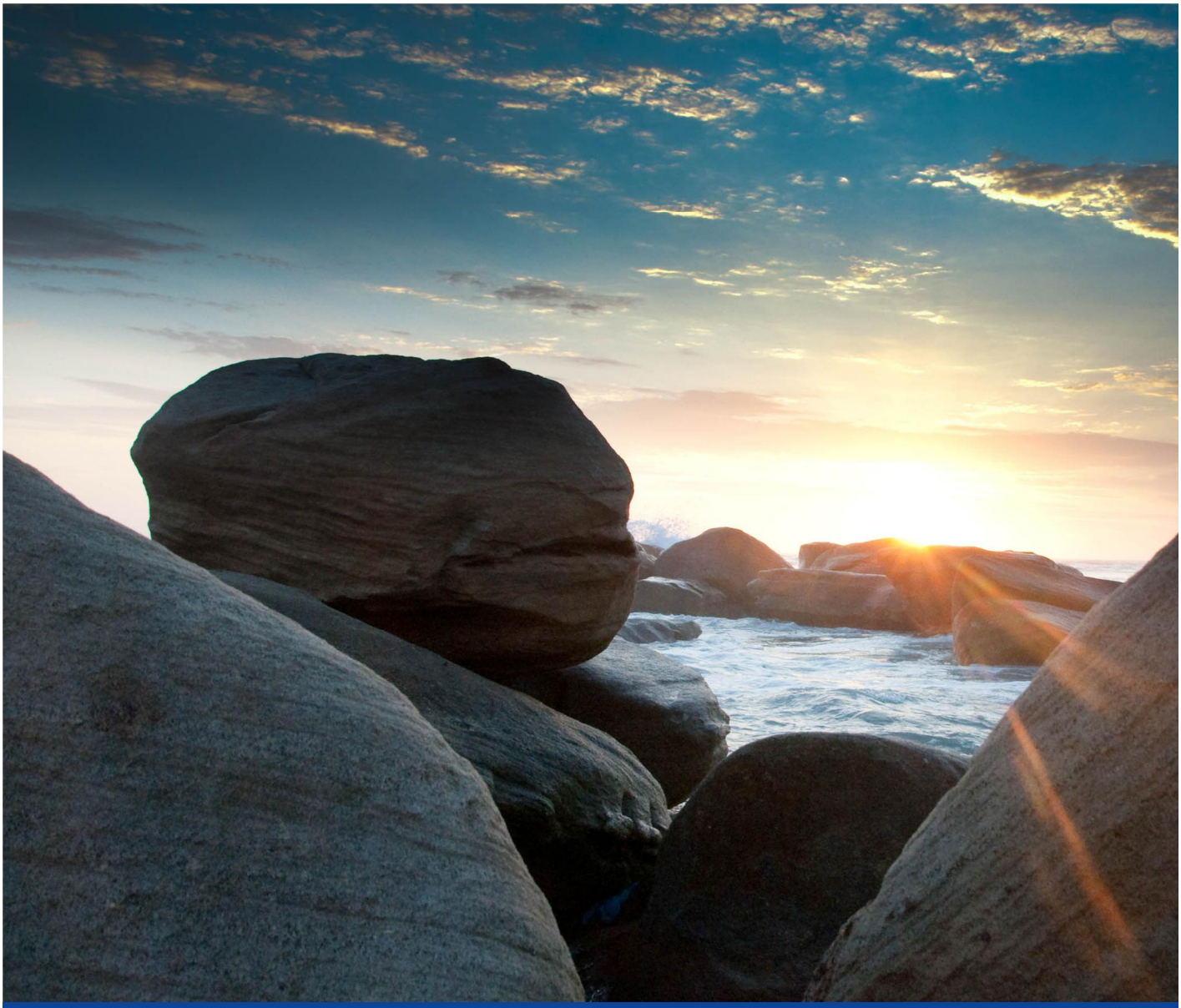

UNITED BY OUR DIFFERENCE

WSP

PROLOGIS PARK, HEATHROW

Flood Risk Assessment

ProLogis UK Ltd.

10/04/2013

Quality Management

Issue/revision	Issue 1	Revision 1	Revision 2	Revision 3
Remarks	DRAFT			
Date	10 April 2013			
Prepared by	J Tang			
Signature				
Checked by	G Guma			
Signature				
Authorised by	A Atkinson			
Signature				
Project number	11012721			
Report number				
File reference	2013-04-10 Prologis Park FRA_Final Draft.docx			

Prologis Park, Heathrow

Flood Risk Assessment

10/04/2013

Client

Prologis UK Ltd
Prologis House
1 Monkspath Hall Road
Solihul
West Midlands
B90 4FY

Consultant

WSP UK
Mountbatten House
Basingstoke
RG21 4HJ
UK

Tel: +44 (0)12 5631 8882
Fax: +44 (0)12 5631 8700

www.wspgroup.co.uk

Registered Address

WSP UK Limited
01383511
WSP House, 70 Chancery Lane, London, WC2A 1AF

WSP Contacts

Charlie Cooper/Joe Tang
Gerald Guma
Alastair Atkinson

Table of Contents

1 Introduction 5
2 Existing Site 6
3 Proposed Development 9
4 Existing Sources of Flooding 10
5 Drainage Strategy 11
6 Conclusions 15
Appendices 16

Table of Appendices

Appendix A – Figure 1 & 2 – Site location plans

Appendix B – Figure 3 – BGS Geology Map, Figure 4 & 5 – Environment Agency Groundwater Maps & Figure 6 - Environment Agency Flood Zones

Appendix C – Environment Agency correspondence

Appendix D – Thames Water correspondence

Appendix E – London Borough of Hillingdon correspondence and SFRA extract

Appendix F – Masterplan – Michael Sparks Associates, Drawing No. 30587-PL101

Appendix G – Topographical survey – GreenHatch Group, Drawing No. 14285-OGL

Appendix H –Drainage Strategy Drawing No. 2721-D-01 and WinDes Calculations

1 Introduction

1.1 Appointment and Brief

1.1.1 WSP UK (WSP) was commissioned by Prologis UK Ltd to undertake a site specific Flood Risk Assessment (FRA) to support an outline planning application for a commercial development at Prologis Park, Heathrow.

1.2 Objective of the Study

1.2.1 The objective of the FRA is to assess the risk of flooding to the proposed development in line with current policy. This report demonstrates that the proposed development is safe from flooding throughout its lifetime and does not increase flood risk elsewhere.

1.2.2 The study assesses flood risk to;

- The site and the proposed development; and
- Any impact on flood risk to other land as a result of the development proposals.

1.2.3 Where required, flood risk mitigation measures have been proposed. The report also provides an outline surface water drainage strategy (see Chapter 5).

1.3 Study Methodology

1.3.1 The appraisal process consisted of a desk study, data research and consultation with regulatory bodies and third parties.

1.3.2 This is an assessment of potential flooding from all possible sources, including fluvial, surface run-off, overland flows, groundwater, sewers and man-made infrastructure. The assessment also identifies and examines the residual flood risk to the proposed development.

1.3.3 Whilst completing the assessment, consideration has been given to the NPPF technical guidance (April 2012). The assessment has been undertaken in accordance with CIRIA C624, 'Development and Flood Risk - Guidance for the Construction Industry' (2004).

1.3.4 As part of the Flood Risk Assessment the following stakeholders have been consulted:

- The Environment Agency;
- Thames Water; and
- London Borough of Hillingdon.

1.4 Limitations

1.4.1 An intrusive site survey has not been undertaken as part of this study.

2 Existing Site

2.1 Site Location

2.1.1 The site is located adjacent to the Stockley Park Industrial area, approximately 2km west of Hayes Town Centre and approximately 0.5km north of Junction 4 of the M4. Heathrow Airport lies approximately 2km south of the site. It is bounded by railway siding to the north and west, residential development to the east and the rest of Prologis Park (commercial) to the south.

2.1.2 The OS grid reference for the site is 508015, 179601 and nearest postcode is UB7 9FN. The site location plans are provided in Appendix A.

2.2 Site Description

2.2.1 The site covers an area of approximately 3.48 Hectares (ha) and is currently cleared for construction pending planning approval. However, until recently the site was occupied by a large commercial warehouse.

2.2.2 Table 2.1 describes the general site characteristics.

Table 2.1 Characteristics of Prologis Park, Heathrow

Area	Approximately 3.48ha
General Topography	The site is predominantly flat.
Existing Surface	Post construction clearance (Greenfield Site)
Current Use	Recently demolished and cleared commercial warehouse
Boundaries	North: Railway line South: Prologis Park (commercial) East: Residential development West: Railway line
Access	Vehicle and pedestrian access: From Perimeter Rd via Prologis Park to the south

2.3 Existing Watercourses

2.3.1 The closest watercourse to the site is the Grand Union Canal which is approximately 180m to the north of the site. Fray's River runs approximately 2.3km to the west of the site. Fray's River is a tributary of the River Colne and the confluence of the rivers is approximately 600m to the south of the site.

2.3.2 The adjacent Carp Pond and Broad Duck SINC at Stockley Road Lake is designated as a Site of Importance for Nature Conversation (SINC) of Metropolitan importance.

2.4 Existing Flood Defences and Other Structures

2.4.1 The Environment Agency has yet to confirm details of any formal flood defences but it is expected that there are no formal defences at the site, as it does not appear that there is a requirement for them.

2.5 Geology and Hydrogeology

2.5.1 Maps on the British Geological Society (BGS) website indicate that the site is underlain by Langley Silts (a sandy clay and silt) over Lynch Hill Gravel (fourth terrace of River Thames). These superficial deposits overly London Clay formation. However, borehole records, from the BGS website, of nearby areas show that there is a gravel layer at a depth of approximately 1.7m with a thickness of around 3m. Refer to the BGS Geology Maps and the Borehole Records provided in Appendix B.

2.5.2 The Environment Agency website indicated that the site does not lie within any ground water Source Protection Zones. Refer to the EA Groundwater SPZ Map provided in Appendix B.

2.6 Historic Flood Records

2.6.1 Table 2.2 below summarises the historic flood records obtained through consultation and liaison with the various bodies contacted as part of the FRA for the proposed development.

Table 2.2: Flood Records Summary

Information Source	Flood Records/Details
The Environment Agency	A response has yet to be received from the Environment Agency.
Thames Water	Thames Water has confirmed that they have no historical records of flooding within the vicinity of the proposed development. Refer to Thames Water correspondence dated 26 March 2013 in Appendix D.
London Borough of Hillingdon	London Borough of Hillingdon has yet to confirm if they have historical records of flooding within the vicinity of the proposed development.

London Borough of Hillingdon Strategic Flood Risk Assessment (SFRA) 2008

2.6.2 Historic flood mapping from London Borough of Hillingdon SFRA show the site to be in Flood Zone 1 and that there are no historic records of groundwater or overland flooding within the vicinity of the site.

2.6.3 The SFRA highlights two artificial waterbodies within the vicinity of the site, the Grand Union Canal to the north and a lake to the west. The SFRA recommends that FRAs consider flood risk from artificial sources within 1 km of the site. Refer to the SFRA extract in Appendix E.

2.7 Flood Mapping

2.7.1 The site is shown to be located entirely in Flood Zone 1 (low probability) on the Environment Agency's Flood Map. Flood Zone 1 is assessed as having less than a 1 in 100 (1%) annual probability of flooding from fluvial sources and is considered to be suitable for all types of land use. Refer to the Environment Agency's Flood Map provided in Appendix B.

3 Proposed Development

3.1 Policy Background

3.1.1 Table 1 in the NPPF Technical Guidance provides a category of the different Flood Zones according to the statistical probability of flooding. According to Table 1 all land uses are appropriate in Flood Zone 1.

London Borough of Hillingdon Pre-Submission Core Strategy (February 2011)

3.1.2 The London Borough of Hillingdon Pre-Submission Core Strategy sets out the vision for development within the borough including the requirements for flood risk for new developments.

3.1.3 The Core Strategy states that development should be avoided in high flood risk areas and SuDS should be used where possible to manage flood risk from surface water.

3.2 Proposed Development and Description

3.2.1 The current development proposals include two large commercial distribution buildings with associated access and parking areas.

3.2.2 Refer to the Overall Site Masterplan (Michael Spark Associates Drawing No. 30587-PL101) in Appendix F.

4 Existing Sources of Flooding

4.1 Existing Sources of flooding

4.1.1 An overview of the existing sources of flooding is presented in Table 4.1.

Table 4.1 Existing Sources of Flooding

Sources	Likelihood Very Likely, Possible, Negligible
Fluvial/Tidal	The flood maps from the Environment Agency website show the site to lie within Flood Zone 1. **Flood Risk – Negligible**
Coastal - Sea	The site is not situated in the vicinity of the sea or coastal water. **Flood Risk – Negligible**
Coastal – Estuarine	See above under Coastal – Sea. (i.e. a negligible risk)
Pluvial/Sheet Runoff	The London Borough of Hillingdon SFRA shows no records of surface water flooding within and in the vicinity of the site. **Flood Risk – Negligible**
Sewer – SWS, FWS, CS	Thames Water has confirmed that they have no records of sewer flooding within the vicinity of the site. **Flood Risk – Negligible**
Groundwater	A response has yet to be received from the Environment Agency regarding groundwater flooding; however, the London Borough of Hillingdon SFRA does not contain any records of previous groundwater flooding within or in the vicinity of the site. Refer to the SFRA extract in Appendix E. **Flood Risk – Negligible**
Dam Breach	The site is not in vicinity of a dam or any river defences **Flood Risk – Negligible**
Canal	The Grand Union Canal runs 180m to the north of the development. Canals are controlled water bodies and generally have a very low risk of flooding. The adjacent Heathrow Express railway embankment also provides an informal flood defence from this residual flood risk. **Flood Risk – Negligible**
Other Sources – Artificial lake	There is an artificial lake (Stockley Road Lake) approximately 170m to the south west of the site. The adjacent railway embankment also provides an informal flood defence to the site from the lake. **Flood Risk – Negligible**

5 Drainage Strategy

5.1 Development Lifespan

5.1.1 Based on a typical lifespan for a commercial development is 60 years, contingency allowances for climate change, set out in Table 5 of the NPPF technical guide, applicable to the site are 20% for the peak rainfall intensity and 20% for the peak river flow.

5.2 Existing Drainage Regime

5.2.1 The site boundary covers an approximate area of 3.48ha, which is currently unoccupied and cleared to make way for the new development construction proposals. Therefore, there are currently no formal surface water drainage systems in place. It is reasonable to assume that surface water runoff on the existing site either infiltrates directly into the ground or create overland runoff away from the site.

5.2.2 Surface Water Runoff from all the main buildings on site, prior to their demolition, drained via a 685mm diameter sewer to the nearby Canal. There was an agreement between British Waterways and the Ministry of Defence (previous owners) to discharge to the Canal.

5.2.3 There is an existing foul rising main located along the area proposed for vehicular access to the new development. This foul rising main had been implemented as part of the overall Prologis Park with the intention for the application site to be developed.

5.2.4 As the application site has been cleared of the previous development, the existing site has been assessed as a Greenfield site. Any future surface water discharged from the proposed development should be limited to the existing Greenfield Runoff Rates. Table 5.1 below indicates the runoff generated by the existing site.

Table 5-1: Existing Greenfield Runoff Rates

Return Period	IOH124 Greenfield Runoff Rates (l/s)
1 Year	5.0
30 Year	13.3
100 Year	18.7
100 Year + Climate Change (30%)	24.3

5.2.5 The Topographical Survey undertaken by GreenHatch Group in March 2010 shows the existing site to be generally quite flat with levels ranging between 32.29mAOD along the northern boundary and 31.22mAOD near the south-eastern boundary of the site.

5.2.6 The Topographical Survey also highlighted several mounds of material currently being stored on the site, which are to be removed prior to the development proposals. Refer to the Topographical Survey provided in Appendix G.

5.2.7 As discussed in Section 2.5 of this report, maps on the British Geological Society website indicate that the site is underlain by London Clay formation. However, borehole records in the vicinity of the site indicate that there is a gravel layer at a depth of approximately 1.7m with a thickness of around

3m. Refer to the Borehole Records provided in Appendix B.

5.2.8 The underlying geology suggests that draining the surface water directly into the ground via infiltration may be possible through the gravel layer stratum. However, the underlying London Clay typically has a very low permeability rate and may restrict vertical groundwater flow.

5.2.9 No intrusive site investigations have been undertaken for the application site, therefore a conservative 10^{-6}m/s permeability value has been assumed for the infiltration coefficient of the underlying geology. A detailed intrusive site investigation should be undertaken during the detailed design stage, to confirm the infiltration rates.

5.3 Drainage Strategy Requirements

5.3.1 The proposed surface water drainage strategy should seek to replicate the site's existing hydrology. Changes in the volume and rate of surface water runoff from the development could increase the risk of flooding upstream and downstream, unless sufficient steps are taken to prevent this happening.

5.3.2 A fundamental principle of sustainable development in terms of minimising the risk of flooding is the reduction of surface water run-off from new developments. The proposed commercial development includes warehousing and offices, and the provision for vehicular car-parking and storage, which will increase the impermeable area within the site.

5.3.3 To provide further reduction of the overall surface water run-off volume, sustainable drainage systems (SuDS) could be considered as they would reduce the amount of rainfall collected at source and where appropriate, improve water quality.

5.3.4 The site's existing hydrology will be replicated as far as practicable by the use of Source Control and SuDS techniques.

5.4 Proposed Surface Water Drainage Strategy

5.4.1 According to the latest development proposals provided by Michael Sparks Associates, the impermeable area of the site will increase significantly compared to that of the existing site. However, with the implementation of Sustainable Drainage Systems (SuDS) as part of the development, it is proposed to attenuate, on site, any increases in surface water runoff.

5.4.2 The proposed development masterplan layout indicates that the development is to be 100% impermeable, which will increase the surface water runoff generated. Using the Modified Rational Method (where Q = 2.78iA) and based on the total impermeable areas in hectares and the rainfall intensities, the runoff rates for the site can be calculated. Table 5.2 below indicates the surface water runoff generated by the proposed development.

Table 5-2: Proposed Development Surface Water Runoff Rates (Uncontrolled)

Return Period	Rainfall Intensity (TRRL Report LR595)	Surface Water Runoff Rates (l/s)	
		Existing Site (Greenfield)	Uncontrolled Post Development
1 Year	50.0	5.0	483.7
30 Year	113.02	13.3	1093.4
100 Year	143.9	18.7	1392.1
100 Year + Climate Change (30%)	187.07	24.3	1809.8

5.4.3 It is proposed to implement infiltrating cellular storage, with a depth of 0.8m, underneath the proposed car parking areas to provide attenuation for the surface water generated by the proposed development. A quick storage volume estimate had been generated using the MicroDrainage software. Based on an infiltration rate of 10^{-6}m/s for the underlying geology, it has been calculated that, for the 1 in 100 year storm event, a storage volume ranging between 1863m^3 and 3901m^3 is required on site for attenuation before infiltrating directly into the ground. Refer to the Drainage Strategy Calculations provided in Appendix H.

5.4.4 Therefore, assessing for the worst case scenario, it has been calculated that an area of 5132.8m^2 is required for cellular storage (based on 0.8m depth and 95% voids) to cater for the increase in impermeable area for the 1 in 100 year plus 30% allowance for climate change. Refer to the Drainage Strategy Calculations in Appendix H.

5.4.5 The latest layout referenced 'Michael Sparks Associates' Drawing No. 30587-PL-101' indicates that there are sufficient car parking areas proposed within the site boundary to implement the infiltrating cellular storage structures. Refer to the Drainage Strategy Drawing No. 2721-D-01 provided in Appendix H.

5.4.6 The drainage strategy for the application site seeks to drain all the surface water generated by the proposed development via infiltration, directly into the underlying geology. Therefore, it is anticipated that the Controlled Post Development Discharge Rates for all storm event scenarios to be zero. This will provide betterment over the existing scenario of which has overland runoff discharging away from the site. Table 5.3 indicates that the proposed controlled development runoff rates for the site.

Table 5-3: Controlled Post Development Runoff Rates

Return Period	Surface Water Runoff Rates (l/s)		
	Existing Site (Greenfield)	Uncontrolled Post Development Runoff	Controlled Post Development Runoff
1 Year	5.0	483.7	0.0
30 Year	13.3	1093.4	0.0
100 Year	18.7	1392.1	0.0
100 Year + Climate Change (30%)	24.3	1809.8	0.0

5.4.7 In accordance with the principle of sustainable development, NPPF and Environment Agency sustainable drainage philosophy, existing runoff rates are calculated using the IOH124 methodology for the site.

5.4.8 Management of extreme event flood risk can be achieved through ensuring the finished flood levels of the proposed buildings are set at least 0.15m above adjacent roads and open spaces in areas where designated overland flood routes are identified.

5.4.9 The proposed development can be undertaken in a sustainable manner without increasing the surface water flood risk either at the site or to any third party land in line with NPPF requirements.

5.5 Foul Drainage Strategy

5.5.1 The development may result in an increase in the volume of foul water discharge from the site. However, Thames Water have stated that they do not expect a significant change to foul sewage flows, so this will not overload the existing foul water sewer system, which will be used to drain the site, or the sewage treatment work Mogden.

6 Conclusions

6.1 Conclusions

6.1.1 WSP UK (WSP) was commissioned by Prologis UK Ltd. to undertake a site specific Flood Risk Assessment (FRA) for a commercial development at Prologis Park, Heathrow.

6.1.2 It is anticipated that the existing Greenfield site, covering approximately 3.48ha, previously drained to the Grand Union Canal. The development proposals seek to provide two large commercial distribution buildings with associated parking areas for loading Lorries.

6.1.3 The permeability of the underlying geology has been assumed to be 10^{-6}m/s, which is a very conservative infiltration rate to determine the worst case scenario. However, a detailed intrusive site investigation should be undertaken to determine accurate infiltration rates during the detailed design stage.

6.1.4 It is proposed that the surface water attenuation volume required on site is provided within 0.8m deep cellular storage structures underneath the car parking areas. These structures will allow surface water to be temporarily stored and then infiltrated directly into the underlying strata without causing any detrimental effects for up to and including the 1 in 100 year storm event plus a 30% allowance for climate change.

6.1.5 At the time of writing, a response was yet to be received from the Environment Agency regarding flood risk at the proposed development; however, the site is shown to be located within Flood Zone 1 on the Environment Agency website. The development is therefore considered to have passed the Sequential Test and is suitable for all types of land use.

6.1.6 Flood risk from overland flows, groundwater flooding, sewer flooding and flooding from reservoirs and canals has been assessed and is considered to be negligible; therefore, flood mitigation is not required.

6.1.7 This FRA confirms that the site is located in an area with a low annual probability of flooding and has a low risk of flooding from all sources. Therefore, the site proposals are considered to be robust and in accordance with the requirements set out in NPPF and the associated Technical Guidance.

6.1.8 Safe access and egress will be available to and from the site for events up to and including the 1 in 100 year plus climate change (30%) rainfall events.

6.1.9 The sites satisfies the requirements of SUR1 of the Code for Sustainable Homes relating to volume and discharge because there are no increases in the volume of discharge from the site, even if there is an increase in hardstanding area within the site.

Appendices

Appendix A – Michael Sparks Associates, Drawing No.30587-PL-100 and Figure 1 – Site Location Plans

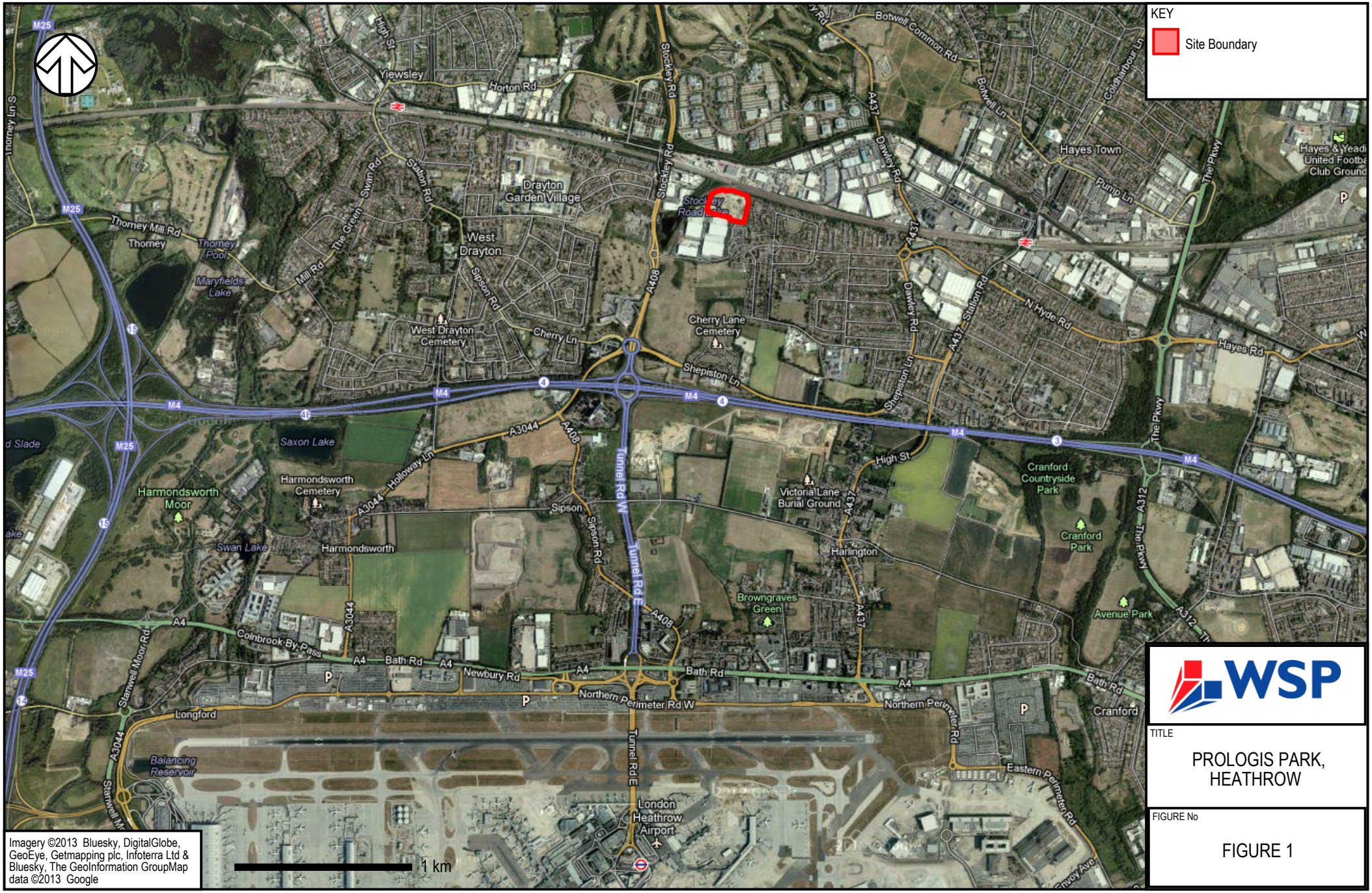
KEY
Site Boundary
Imagery ©2013 Bluesky, DigitalGlobe, GeoEye, Getmapping plc, Infoterra Ltd & Bluesky, The GeoInformation GroupMap data ©2013 Google
1 km
WSP
TITLE
PROLOGIS PARK, HEATHROW
FIGURE No
FIGURE 1

NOTES:

SUBJECT TO STATUTORY CONSENTS

BASED ON GREENHATCH SURVEY NO. 7159ENT_1

BASED ON OS MAP REPRODUCED BY PERMISSION OF CONTROLLER OF HM STATIONARY OFFICE (c) CROWN COPYRIGHT

COPYRIGHT RESERVED

BOUNDARIES BASED ON LAND REGISTRY TITLE NUMBER MX131015

ADOPTED HIGHWAY BOUNDARY BASED ON INFORAMTION RECEIVED FROM LONDON BOROUGH OF HILLINGDON

NORTH

0 25 50 100 m

REV	DATE	COMMENT	DRAW	CHCK
–	18.12.12	FIRST ISSUE	VCN	PW

MICHAEL SPARKS ASSOCIATES
CHARTERED ARCHITECTS
11 PLATO PLACE
ST.DIONIS ROAD
LONDON SW6 4TU
TELEPHONE 020 7736 6162
FAX 020 7736 3896
info@msa-architects.co.uk

PROLOGIS

TITLE
PROLOGIS PARK, HEATHROW

DRAWING
SITE LOCATION PLAN

CLIENT
PROLOGIS UK LTD.

DATE	SCALE	DRAWN
DECEMBER 2012	1:1000 @ A1	PW
	STATUS: FOR PLANNING	CHECKED: PW

DRAWING NUMBER
30587-PL-100

01/100 SITE LOCATION PLAN
1:1000

Appendix B – Figure 3 – BGS Geology Map, Figure 4 & 5 – Environment Agency Groundwater Maps & Figure 6 - Environment Agency Flood Zones

FIGURE 3 – BGS GEOLOGY MAP

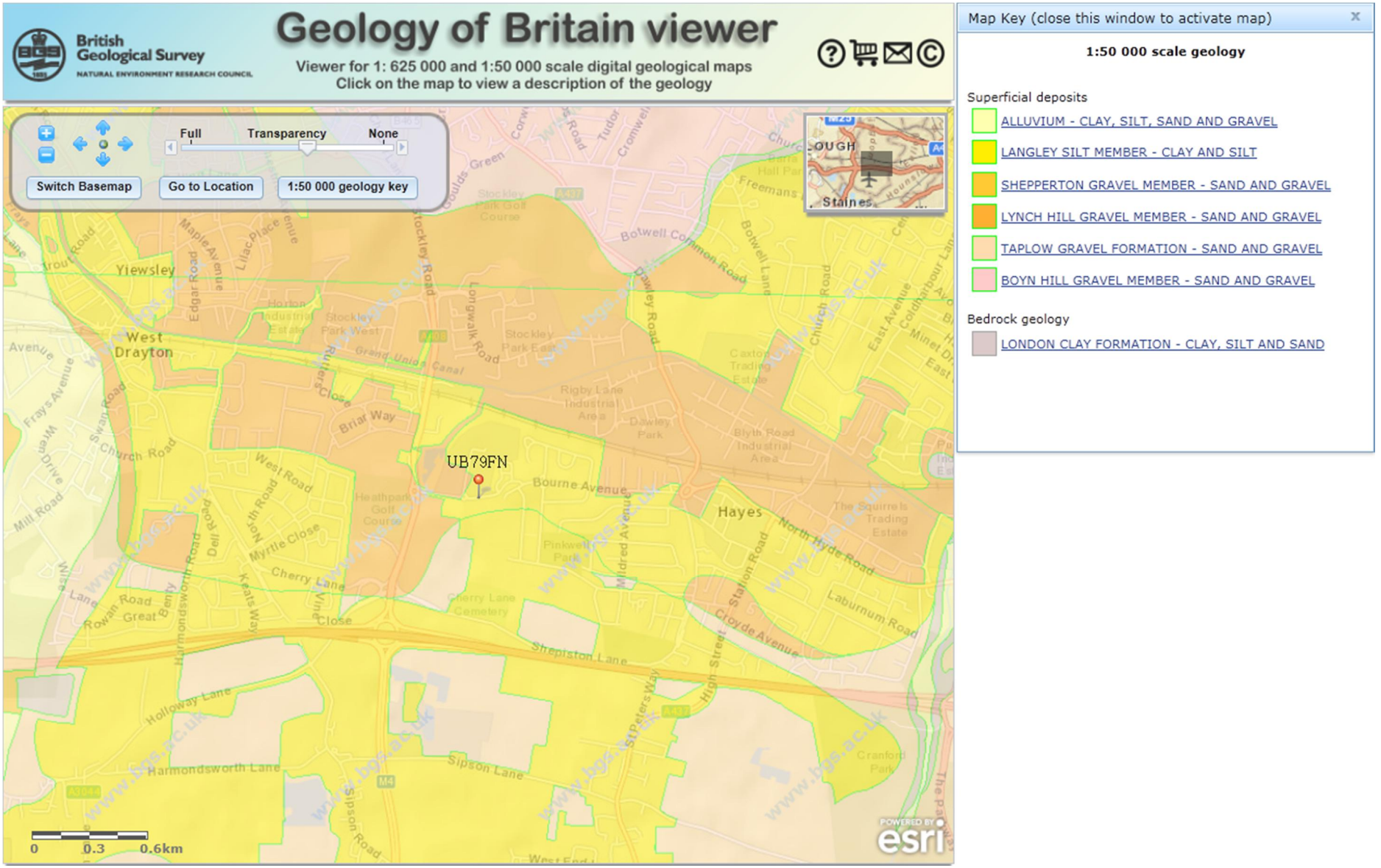

http://mapapps.bgs.ac.uk/geologyofbritain/home.html

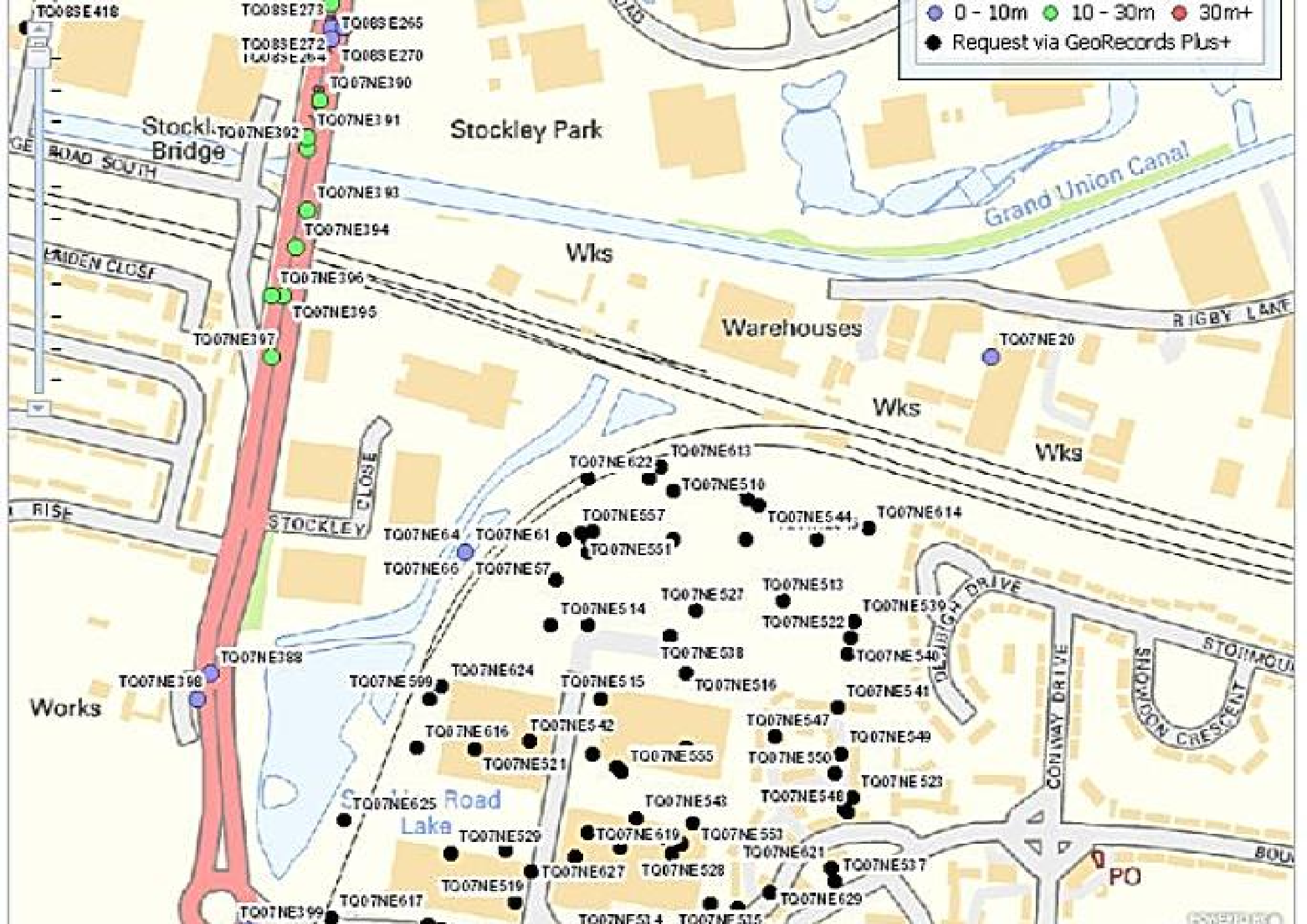

0 - 10m
10 - 30m
30m+
Request via GeoRecords Plus+
Stockley Park
Stockley Bridge
Grand Union Canal
Wks
Warehouses
Wks
Wks
Works
Road Lake
PO
STOCKLEY CLOSE
RIGBY LANE
CONWAY DRIVE
SNOWDON CRESCENT
TQ08SE418
TQ08SE273
TQ08SE265
TQ08SE272
TQ08SE270
TQ07NE390
TQ07NE391
TQ07NE392
TQ07NE393
TQ07NE394
TQ07NE396
TQ07NE395
TQ07NE397
TQ07NE20
TQ07NE622
TQ07NE613
TQ07NE510
TQ07NE557
TQ07NE544
TQ07NE614
TQ07NE64
TQ07NE61
TQ07NE551
TQ07NE66
TQ07NE57
TQ07NE513
TQ07NE527
TQ07NE514
TQ07NE539
TQ07NE522
TQ07NE538
TQ07NE540
TQ07NE388
TQ07NE398
TQ07NE624
TQ07NE599
TQ07NE515
TQ07NE516
TQ07NE541
TQ07NE547
TQ07NE616
TQ07NE542
TQ07NE549
TQ07NE521
TQ07NE555
TQ07NE550
TQ07NE523
TQ07NE625
TQ07NE543
TQ07NE548
TQ07NE529
TQ07NE619
TQ07NE553
TQ07NE621
TQ07NE627
TQ07NE528
TQ07NE537
TQ07NE519
TQ07NE617
TQ07NE629
TQ07NE399

TQ 07 NE /20

0823 7976

7.

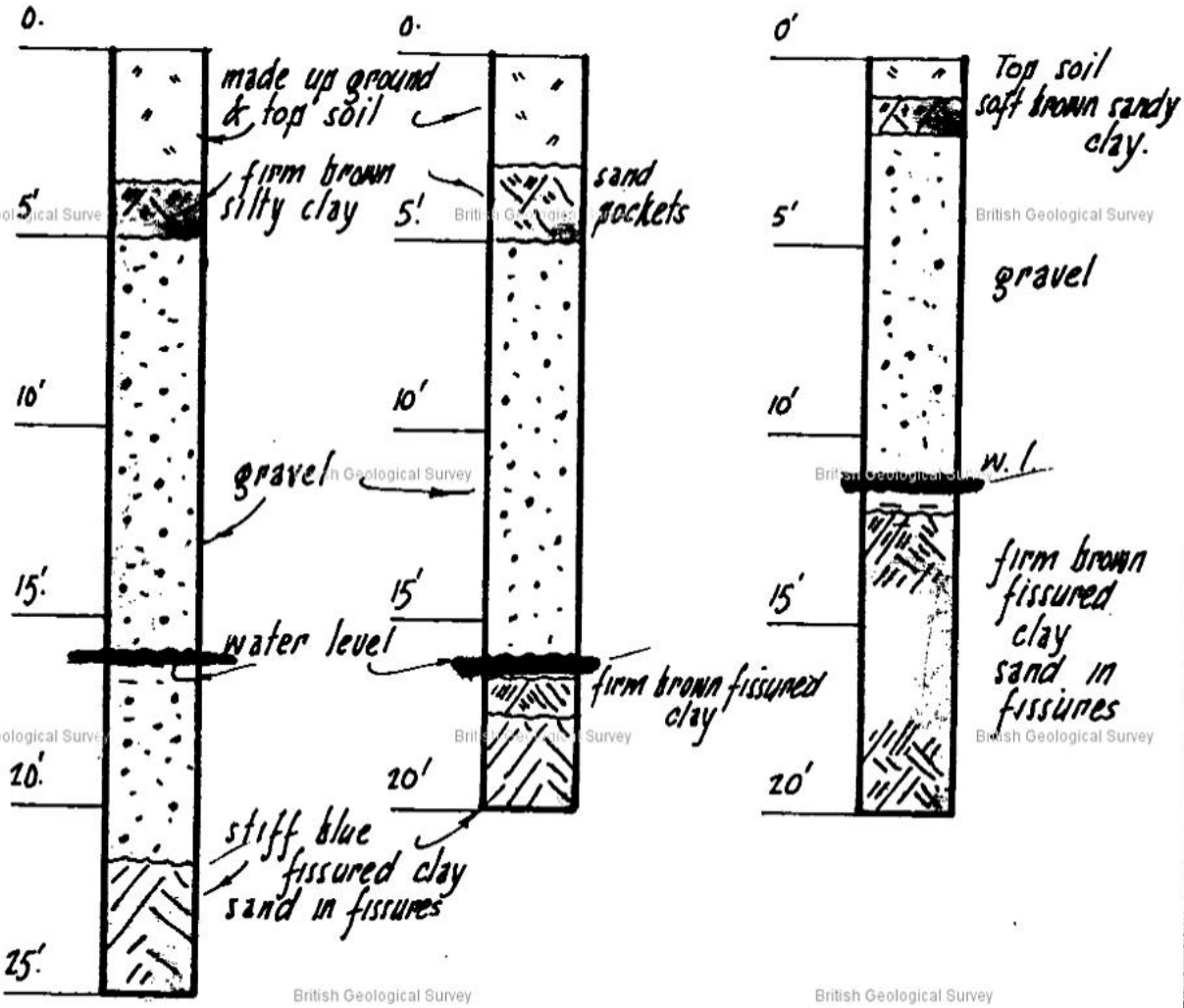

BOREHOLE DATA from report dated June 1960.

SITE : DAWLEY ROAD . HAYES .

Middlesex County Council
ARCHITECT'S DEPARTMENT

H.d. Whitfield Lewis F.R.I.B.A. County Architect

1 Queen Anne's Gate Buildings, Dartmouth Street, Westminster, London SW1 TRAfalgar 7799x 285

(Structural Section)

drawn/checked 7/62 A

first issue

printed

SCALE

job

drawing

sheet size A4
297 x 210 mm

Record of Borehole No. 1

Location: WEST DRAYTON NIDC

Sheet 1 of 1

Client: PROPERTY SERVICES AGENCY

Type of boring: LIGHT CABLE PERCUSSION

TQ07NE55 078 796

Job No. 11311924 Ground level 31.54m A.O.D. Diameter / 150mm Casing / 150mm

Daily Progress	Ground water levels	Depth of casing	Samples: Depth	Samples: No.	Samples: Type	Scale	Strata: Depth	Strata: Reduced level	Description of strata	Legend
18.5.89	NIL	NIL	0.15-0.40	1	B		G.L.	31.54		
							0.15	31.39	TOPSOIL/MADE GROUND	
			0.50-0.95	2	U		0.40	31.14	MADE GROUND: Dark brown to black silty clayey sand with some metal, clinker and rootlets.	
			1.00	3	D	1			Very dense orange/brown silty clayey to very clayey fine to coarse sub-angular to rounded flint GRAVEL with much sand and frequent pockets of clay.	
		1.00	1.00-1.45	4	D,C(106					
							1.70	29.84		
		2.00	2.00-2.45	5	B,C(40)	2			Medium dense to dense light brown fine to coarse, occasionally cobble-sized, subangular to rounded very sandy GRAVEL.	
		3.00	3.00-3.45	6	B,C(43)	3				
		4.00	4.00-4.45	7	B,C(17)	4				
							4.70	26.84		
		5.00	5.00-5.45	8	U	5	5.00	26.54	Stiff, extremely closely fissured brown silty CLAY.	
			5.50	9					Very stiff extremely closely fissured dark greyish brown silty CLAY with occasional fine silt partings and occasional shell traces.	
			5.50-5.95	10	D,S(22)	6				
		6.50	6.50-6.95							
			7.00	12	D	7				
			7.00-7.45	13	D,S(23)					
		7.50	8.00-8.45	14	U	8				
			8.50	15	D		8.50		... with occasional nodules of moderately weak claystone.	
			8.50-8.95	16	D,S(25)	9				
			9.50-9.95	17	U					
10.00	DRY	7.50	10.00	18	D	10	10.00	21.54	BOREHOLE COMPLETED	

Key
- U.... undisturbed 102mm diameter sample
- D.... disturbed jar sample
- B.... disturbed bulk sample
- W.... water sample
- S( ). standard penetration test
- C( ). cone penetration test
- (33).. number of blows ('N' value)
- ▼.. groundwater encountered

Remarks
Water added from 1.00m to 4.70m to assist drilling.

GROUND ENGINEERING

British Geological Survey

FIGURE 4 – ENVIRONMENT AGENCY'S GROUNDWATER SOURCE PROTECTION ZONE MAP

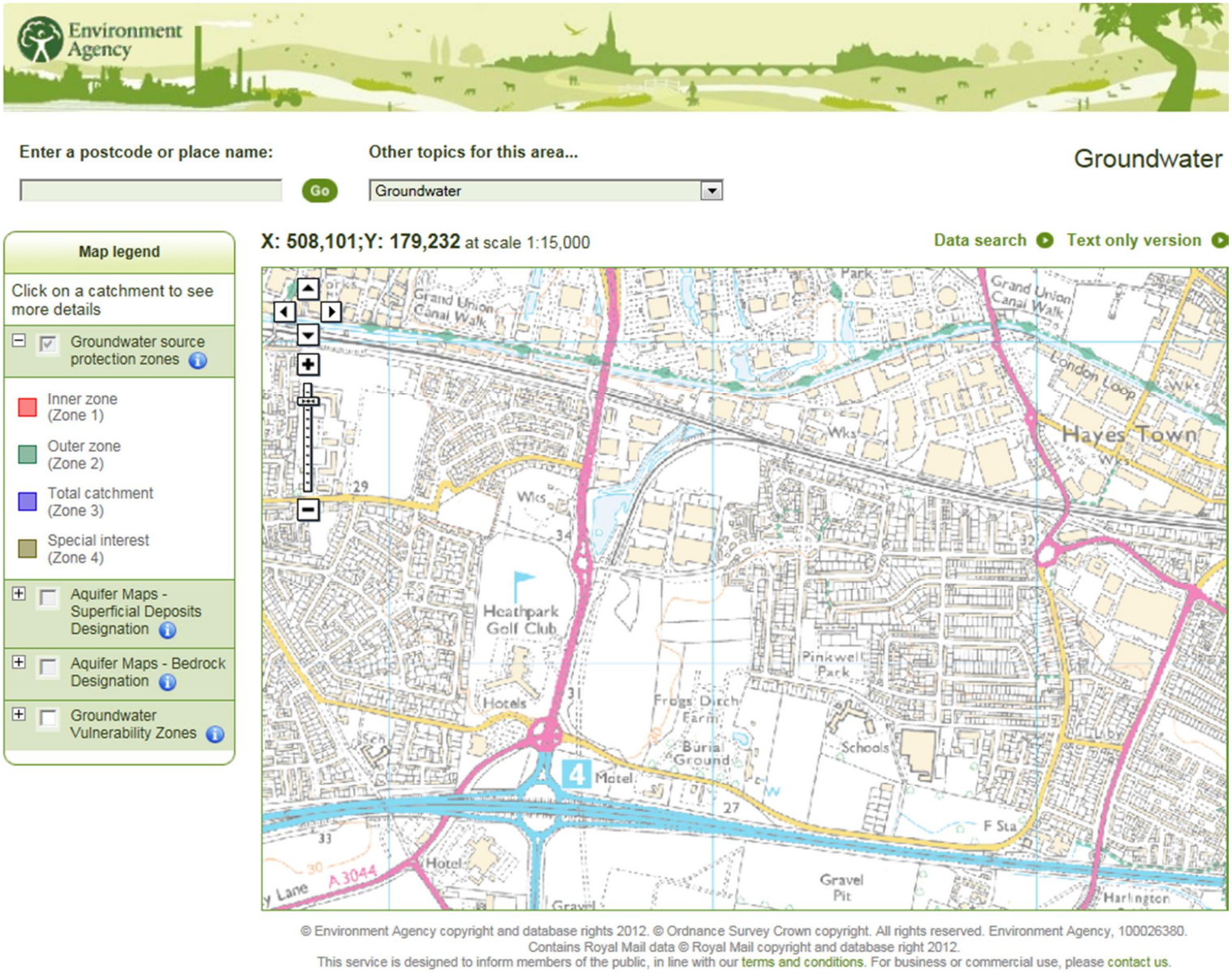

http://maps.environment-agency.gov.uk/wiyby/wiybyController?value=UB7+9FN&lang=_e&ep=map&topic=floodmap&layerGroups=default&scale=9&textonly=off&submit.x=0&submit.y=0#x=508101&y=179232&lg=1,&scale=10

FIGURE 5 – ENVIRONMENT AGENCY'S GROUND VULNERABILITY ZONES

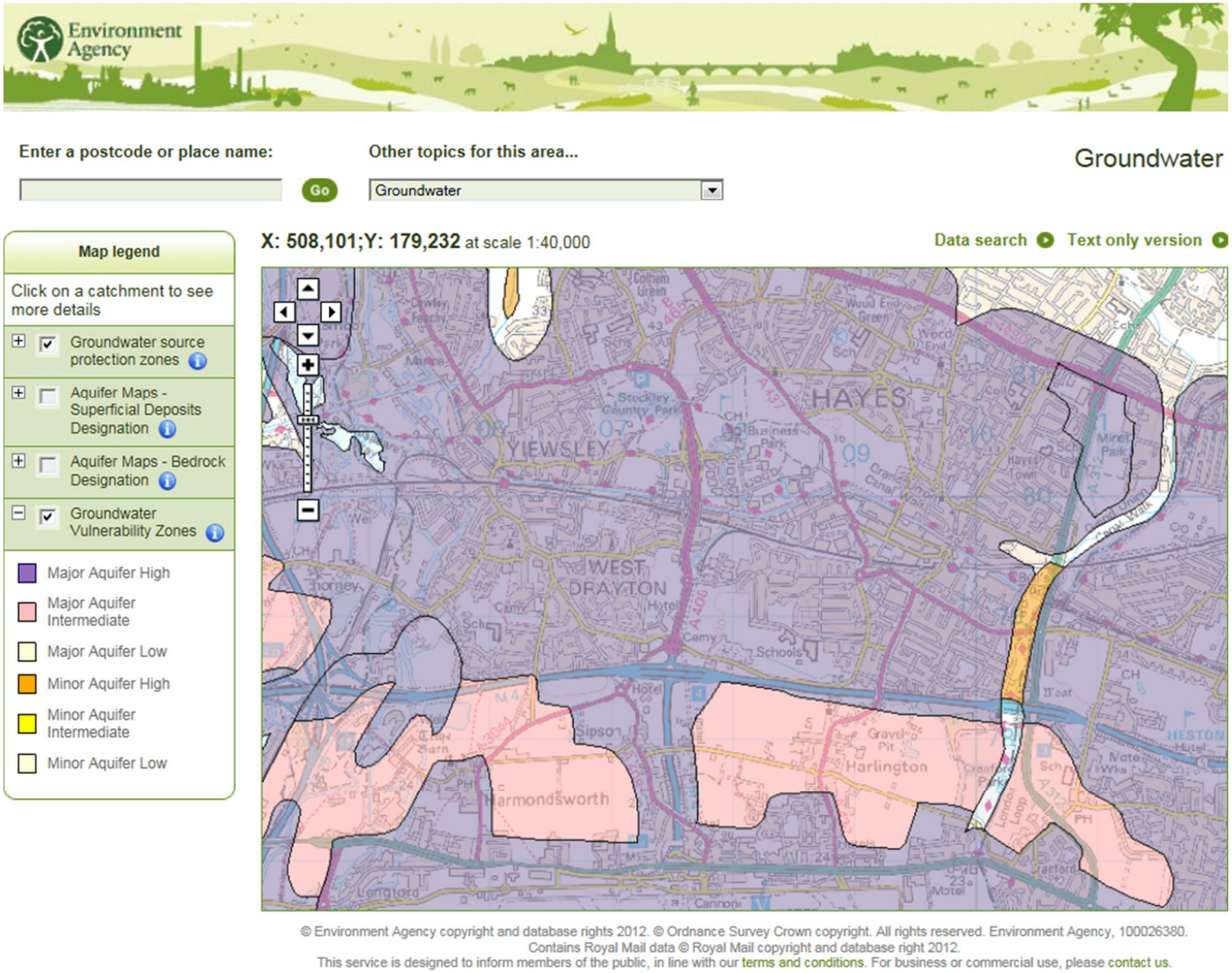

http://maps.environment-agency.gov.uk/wiyby/wiybyController?topic=groundwater&layerGroups=default&lang=_e&ep=map&scale=10&x=508101.4895833335&y=179231.75000000017#x=508101&y=179232&lg=1,2,&scale=8

FIGURE 6 – ENVIRONMENT AGENCY'S FLOOD MAP

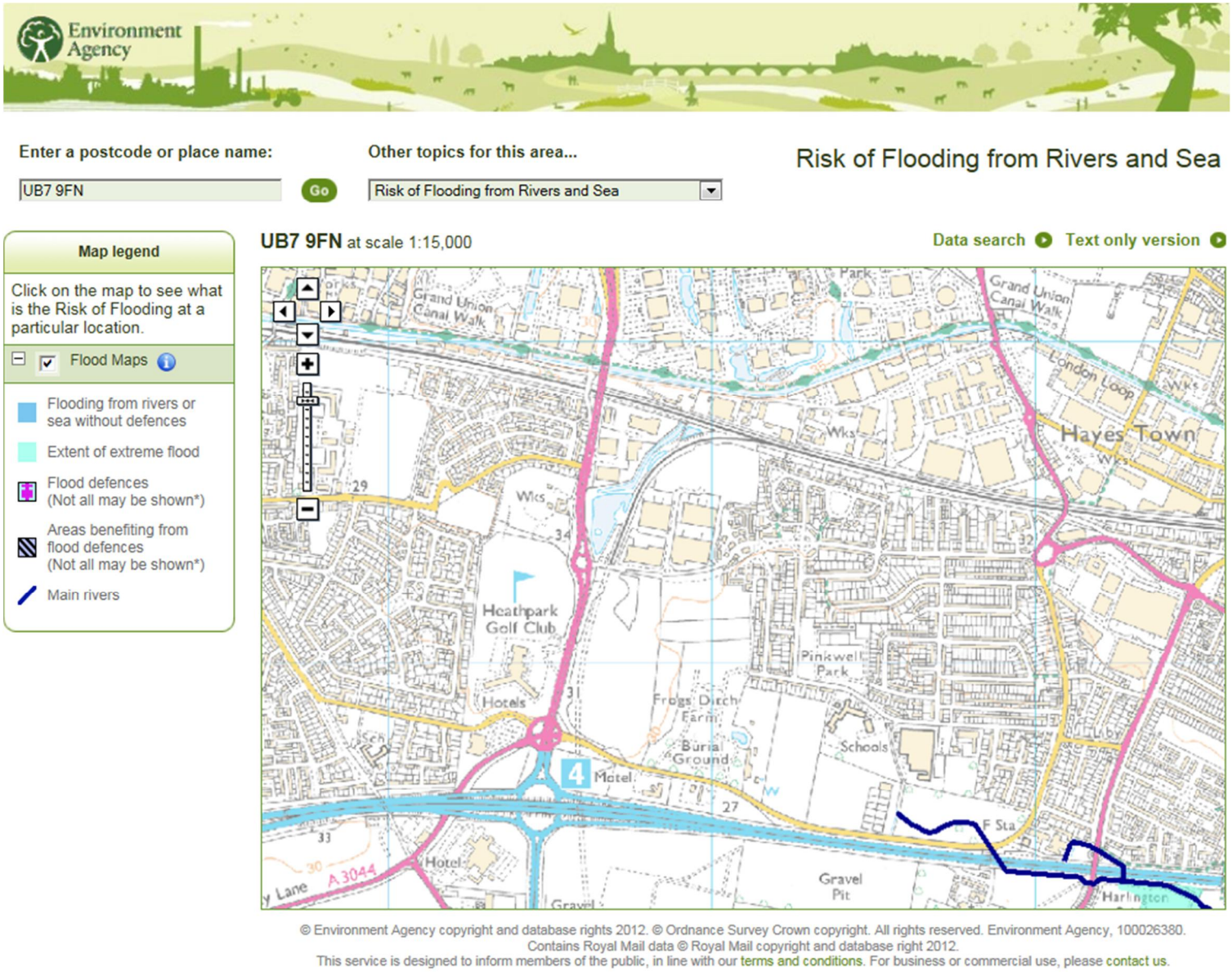

http://maps.environment-agency.gov.uk/wiyby/wiybyController?value=UB7+9FN&lang=_e&ep=map&topic=floodmap&layerGroups=default&scale=9&textonly=off&submit.x=0&submit.y=0#x=508101&y=179232&lg=1,&scale=10

Appendix C – Environment Agency correspondence

Your ref:
Our ref: GG/paw/11012721

06 March 2013

Environment Agency

Mountbatten House
Basingstoke
RG21 4HJ
UK

Tel: +44 (0)12 5631 8643
Fax: +44 (0)12 5631 8700
www.wspgroup.co.uk

Dear Sirs

Prologis Park, Heathrow
Flood Risk Assessment – Enquiry

We are writing to request flood risk and defence information with respect to proposed development at the above site.

The brownfield site is shown to be located in Flood Zone 1. The OS grid reference for the site is (507978, 179596) and the nearest postcode is UB3 1SW. Please find enclosed a location map for your reference.

We have been instructed by our client to carry out a Flood Risk Assessment for the proposed development at the above site.

With regards to completing the above in compliance with the National Planning Policy Framework (NPPF), WSP would like to request the following information:

1 Does the Environment Agency have any predicted flood levels for the site? Are these levels suitable for use in a formal Flood Risk Assessment?

2 What are the predicted 1 in 20 year, 1 in 100 year, 1 in 200 year, 1 in 100 year climate change and the 1 in 1000 year flood levels for this site? Can the Environment Agency confirm if these levels are suitable for a Flood Risk Assessment?

3 Can the Environment Agency supply a detailed flood map for this area? (We already have access to the Environment Agency web site Flood Maps).

4 Does the Environment Agency have any historical records of flooding in the vicinity of the site? If not, can you confirm that the site has no record of flooding in the past?

5 Are there any significant hydraulic structures in the area that might control the flow?

6 What is the Aquifer classification of this area? Are there any protection zones at or adjacent to the site?

7 Are there any known Ground Water levels on or within the vicinity of the site? Does the Environment Agency have any records of groundwater flooding at or in the vicinity of the site?

8 What would the Environment Agency require interims of the drainage strategy at the site?

9 What freeboard is required, for the site?

10 Any other flood data the Environment Agency considers useful for the above site?

In order to undertake a formal the NPPF Flood Risk Assessment to satisfy the Environment Agency, WSP would like to confirm the following:

1 The site is shown as lying **within Flood Zone 1** according to current Environment Agency Flood Map.

2 The preliminary risk of flooding to the site is fluvial.

3 The site is required to have safe accesses route.

4 The specific freeboard level to all structures is to be 300mm above the 1 in 100 year climate change event.

We trust the above to be satisfactory, however, should you have any queries please do not hesitate to contact myself.

Yours faithfully

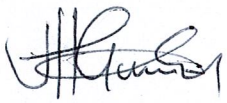

Gerald Guma
Senior Engineer

DDI: +44 (0)12 5631 8664

Encs Site location plans

Tang, Joe

From:	NET Enquiries <NETenquiries@environment-agency.gov.uk>
Sent:	18 March 2013 17:38
To:	Guma, Gerald
Subject:	NE34439 BC - Ref 130308/JC05 Prologis Park, Heathrow - Flood Risk Assessment - Enquiry
Attachments:	Standard Notice.pdf

Dear Gerald Guma

Enquiry regarding data for Prologis Park, Heathrow

Thank you for your request for information. I have checked with our Partnerships & Strategic Overview Team (PSO) and there is no relevant modelling data for the Grand Union Canal. We can provide you with the remaining requested data.

The entire canal network was managed by British Waterways until the start of July 2012 when a new organisation called The Canal and River Trust took over ownership. This includes; Grand Union Canal (Main Line and Paddington Arm), the Regent's Canal, the River Lee Navigation, Hertford Union Canal and the Limehouse Cut, including the Docklands water spaces. Therefore, we recommend you contact them with your proposals as they may hold useful data.

Before proceeding with this request, we will require a payment of £50 + VAT (£60). This is a charge for the copyright licence which is set out in our Standard Notice, which explains how you can use the information.

Charging Summary

Copyright Licence Charge = £50 + VAT
Total Charge = £60

You can pay by credit/debit card by calling me at the number below. Please be aware that we can only take payment from the person who is named on the credit/debit card. Once we have received your payment, we will start working on your enquiry. Please make cheques payable to the Environment Agency and send to the address below stating our reference number:

Environment Agency
2 Bishop Square Business Park
St Albans Road West
Hatfield
Hertfordshire
AL10 9EX

The enquiry is currently on Day 8 of 20 and will be placed on hold until we receive payment. If I have not received your payment within 60 days, I will assume that you no longer require the information. If you have any queries, please do not hesitate to contact me.

Yours sincerely

Becki Clark
External Relations Officer
Environment Agency
Direct dial 01707 632302

Direct e-mail NETenquiries@environment-agency.gov.uk

VAT Registration Number: GB 662 4901 34

For more information on our products, please visit the following link:

http://www.environment-agency.gov.uk/research/planning/93498.aspx

---

From: Enquiries, Unit
Sent: 08 March 2013 09:27
To: Gerald.Guma@WSPGroup.com
Subject: FW: Ref 130308/JC05 Prologis Park, Heathrow - Flood Risk Assessment - Enquiry

Dear Gerald

Thank you for your enquiry regarding a flood risk assessment.

For your information, I have passed your query to our local External Relations Team (Planning and Corporate Services) for advice. They will check whether we hold this information and they will be in touch with you shortly. The External Relations team have 20 working days from the date we receive your enquiry to provide a response, and they will get this to you as soon as possible.

Should you wish to contact them in the meantime, their details are below. Please quote your Enquiry Ref 130308/JC05 in your correspondence with us.

External Relations
Planning and Corporate Services
Environment Agency
South East Region, North East Thames Area
Apollo Court
2 Bishops Square Business Park
St Albans Road West
HATFIELD
AL10 9EX

Tel: 03708 506506

We trust that this information will be useful.

Kind regards

Joanne Carney
Customer Service Advisor
Email Enquiries Unit
National Customer Contact Centre
Part of National Operations
Environment Agency
Tel: 03708 506506
Website: www.environment-agency.gov.uk/

Follow us on

We would really like to know what you think of our customer service. Please can you spare five minutes to complete our short survey; your feedback will help us identify where we need to improve.

The survey is completely anonymous.

http://feedback.environmentagency.uk.com/s/HZwQiDVgYzGSx3Z

From: Guma, Gerald [mailto:Gerald.Guma@WSPGroup.com]
Sent: 06 March 2013 16:26
To: Enquiries, Unit
Subject: Ref 130308/JC05 Prologis Park, Heathrow - Flood Risk Assessment - Enquiry

Click here to report this email as spam.

<<130306EA.pdf.pdf>> <<Site Location_1.pdf>> <<30587-PL-100 - SITE LOCATION PLAN.PDF>>

Dear Sirs

Prologis Park, Heathrow

Flood Risk Assessment – Enquiry

We are writing to request flood risk and defence information with respect to proposed development at the above site.

The brownfield site is shown to be located in Flood Zone 1. The OS grid reference for the site is (507978, 179596) and the nearest postcode is UB3 1SW. Please find enclosed a location map for your reference.

We have been instructed by our client to carry out a Flood Risk Assessment for the proposed development at the above site.

With regards to completing the above in compliance with the National Planning Policy Framework (NPPF), WSP would like to request the following information:

1 Does the Environment Agency have any predicted flood levels for the site? Are these levels suitable for use in a formal Flood Risk Assessment?

2 What are the predicted 1 in 20 year, 1 in 100 year, 1 in 200 year, 1 in 100 year climate change and the 1 in 1000 year flood levels for this site? Can the Environment Agency confirm if these levels are suitable for a Flood Risk Assessment?

3 Can the Environment Agency supply a detailed flood map for this area? (We already have access to the Environment Agency web site Flood Maps).

4 Does the Environment Agency have any historical records of flooding in the vicinity of the site? If not, can you confirm that the site has no record of flooding in the past?

5 Are there any significant hydraulic structures in the area that might control the flow?

6 What is the Aquifer classification of this area? Are there any protection zones at or adjacent to the site?

7 Are there any known Ground Water levels on or within the vicinity of the site? Does the Environment Agency have any records of groundwater flooding at or in the vicinity of the site?

8 What would the Environment Agency require interims of the drainage strategy at the site?

9 What freeboard is required, for the site?

10 Any other flood data the Environment Agency considers useful for the above site?

In order to undertake a formal the NPPF Flood Risk Assessment to satisfy the Environment Agency, WSP would like to confirm the following:

1 The site is shown as lying **within Flood Zone 1** according to current Environment Agency Flood Map.

2 The preliminary risk of flooding to the site is fluvial**.**

3 The site is required to have safe accesses route.

4 The specific freeboard level to all structures is to be 300mm above the 1 in 100 year climate change event.

We trust the above to be satisfactory, however, should you have any queries please do not hesitate to contact myself.

Yours faithfully

Gerald Guma

Senior Engineer

WSP UK Limited

DDI: +44 (0)12 5631 8664

Encs Site location plans

Gerald Guma
Senior Engineer, Property & Development

Mountbatten House, Basing View, Basingstoke RG21 4HJ
Tel: +44(0)1256318664
Fax: +44(0)1256318700
Website: www.wspgroup.co.uk

We are WSP. United by our difference.

ACE Engineering Excellence Award Winner 2011

Environmental Advisor of the Year 2011
BIM – Shaping our Business

WSP is a FTSE4Good company

WSP is one of the world's fastest-growing design, engineering and management consultancies. Specialising in property, transport and environmental projects, we work with clients to create built and natural environments for the future.

Confidential
This e-mail is confidential to the named recipient. If you have received a copy in error, please destroy it. You may not use or disclose the contents of this e-mail to anyone, nor take copies of it. The only copies permitted are (1) by the named recipient and (2) for the purposes of completing successful electronic transmission to the named recipient and then only on the condition that these copies, with this notice attached, are kept confidential until destruction.

WSP UK Limited Registered Office: WSP House, 70 Chancery Lane, London, WC2A 1AF Registered Number 01383511 England

If possible, please consider saving paper by not printing your e-mail.

Information in this message may be confidential and may be legally privileged. If you have received this message by mistake, please notify the sender immediately, delete it and do not copy it to anyone else.

We have checked this email and its attachments for viruses. But you should still check any attachment before opening it.
We may have to make this message and any reply to it public if asked to under the Freedom of Information Act, Data Protection Act or for litigation. Email messages and attachments sent to or from any Environment Agency address may also be accessed by someone other than the sender or recipient, for business purposes.

If we have sent you information and you wish to use it please read our terms and conditions which you can get by calling us on 08708 506 506. Find out more about the Environment Agency at www.environment-agency.gov.uk

Appendix D – Thames Water correspondence

...the Ordnance Survey map with the Sanction of the Controller of H.M. Stationery Office, licence no. WU298557 Crown Copyright Reserved.

Thames Water

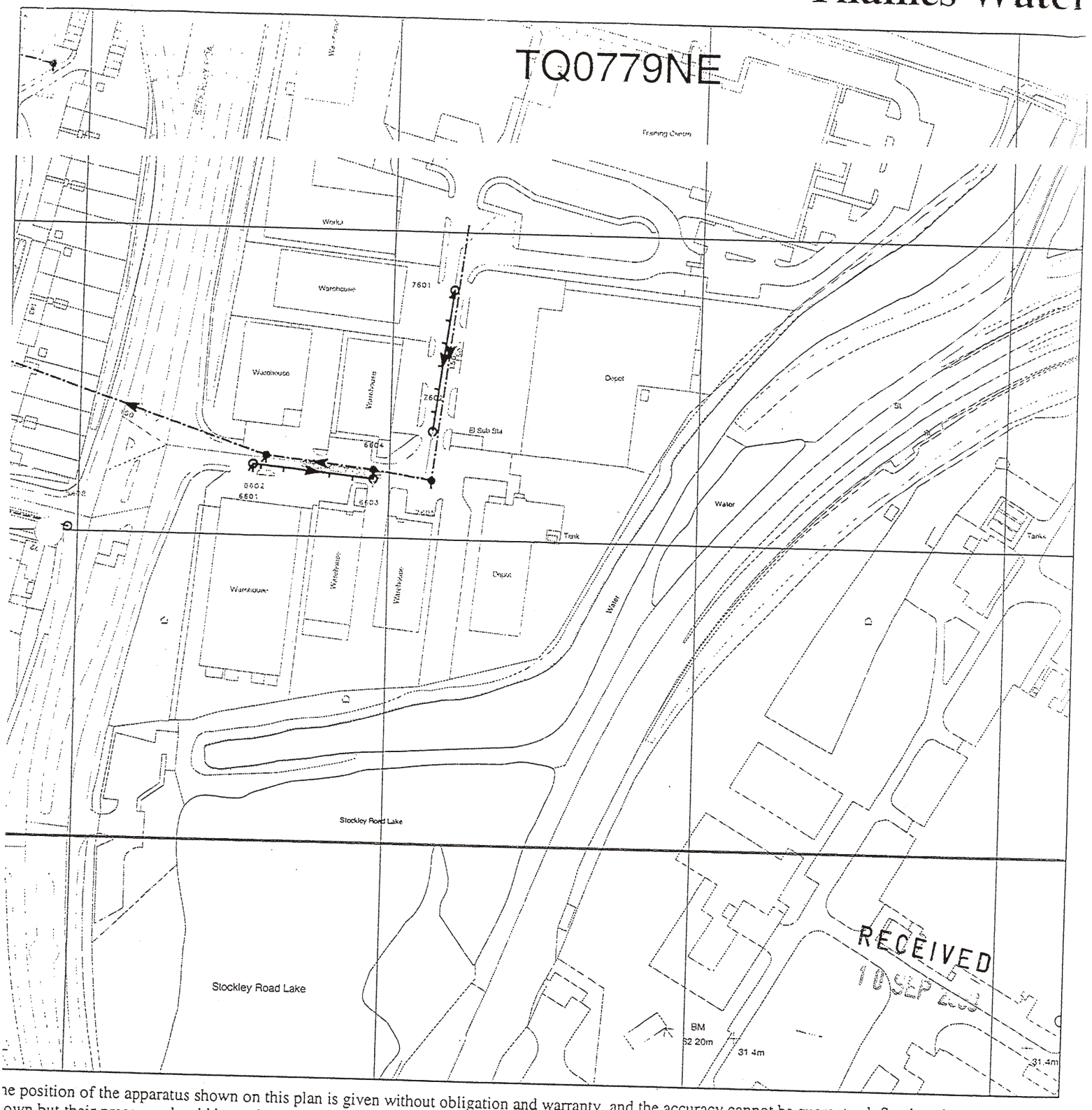

...he position of the apparatus shown on this plan is given without obligation and warranty, and the accuracy cannot be guaranteed. Service pipes are not ...own but their presence should be anticipated. No liability of any kind whatsoever is accepted by Thames Water for any error or omission. The actual ...osition of mains and services must be verified and established on site before any works are undertaken.

...0 metre intervals

Thames Water Customer Enquiries Sewer Plan

COMMON SEWER TYPES

Foul Sewerage

Surface

Combined Sewerage

OTHER SEWER TYPES

Trade Effluent

Vent Pipe

Rising Foul

(c) COPYRIGHT: Unauthorised reproduction prohibited

...entre: (507750 , 179595): TQ0779NE. Printed on 2 September 2003 at 15:04:02 by PFOSSEY.

...with the Ordnance Survey map with the Sanction of the Controller of H.M. Stationery Office, licence no. WU298557 Crown Copyright Reserved.

Thames Water

The position of the apparatus shown on this plan is given without obligation and warranty, and the accuracy cannot be guaranteed. Service pipes are not known but their presence should be anticipated. No liability of any kind whatsoever is accepted by Thames Water for any error or omission. The actual position of mains and services must be verified and established on site before any works are undertaken.

100 metre intervals

Thames Water Customer Enquiries Sewer Plan

COMMON SEWER TYPES

- Foul Sewerage
- Surface
- Combined Sewerage

OTHER SEWER TYPES

- Trade Effluent
- Vent Pipe

RECEIVED
10 SEP 2003

(c) COPYRIGHT: Unauthorised reproduction prohibited

Centre: (507989 , 179595): TQ0779NE. Printed on 2 September 2003 at 15:04:11 by PFOSSEY.

...Survey map with the Sanction of the
...oller of H.M. Stationery Office, licence no. WU298557.
Crown Copyright Reserved.

Thames Water

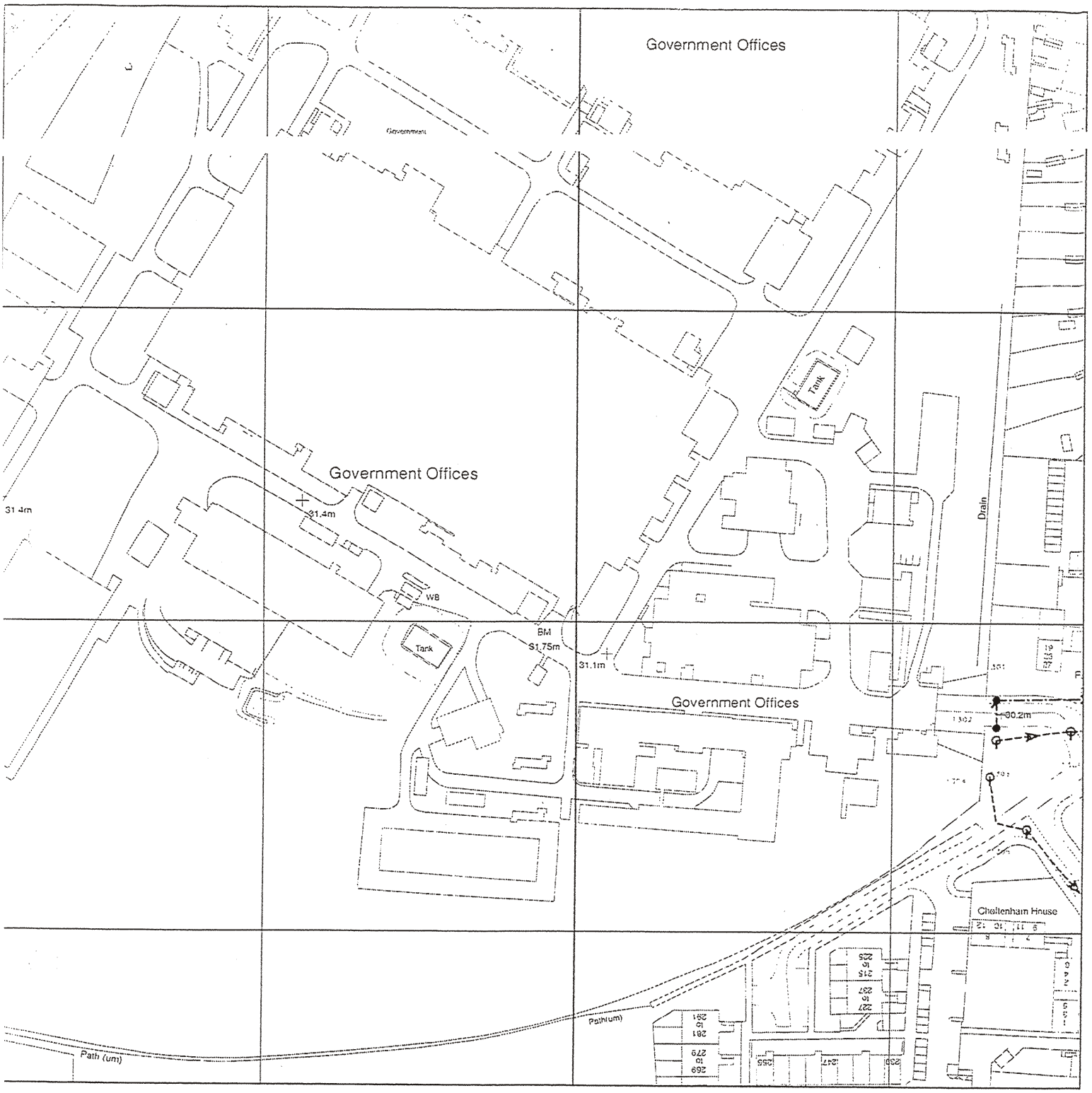

he position of the apparatus shown on this plan is given without obligation and warranty, and the accuracy cannot be guaranteed. Service pipes are not ıown but their presence should be anticipated. No liability of any kind whatsoever is accepted by Thames Water for any error or omission. The actual osition of mains and services must be verified and established on site before any works are undertaken.

00 metre intervals

Thames Water Customer Enquiries Sewer Plan

COMMON SEWER TYPES

Foul Sewerage

Combined Sewerage

OTHER SEWER TYPES

Trade Effluent

Vent Pipe

Rising Foul

RECEIVED
10 SEP 2003

(c) COPYRIGHT: Unauthorised reproduction prohibited

entre: (507989 , 179423): TQ0779SE. Printed on 2 September 2003 at 15:04:24 by PFOSSEY.

...ed on the Ordnance Survey map with the Sanction of the
controller of H M Stationery Office, licence no. WU298557.
Crown Copyrigh: Reserved.

Thames Water

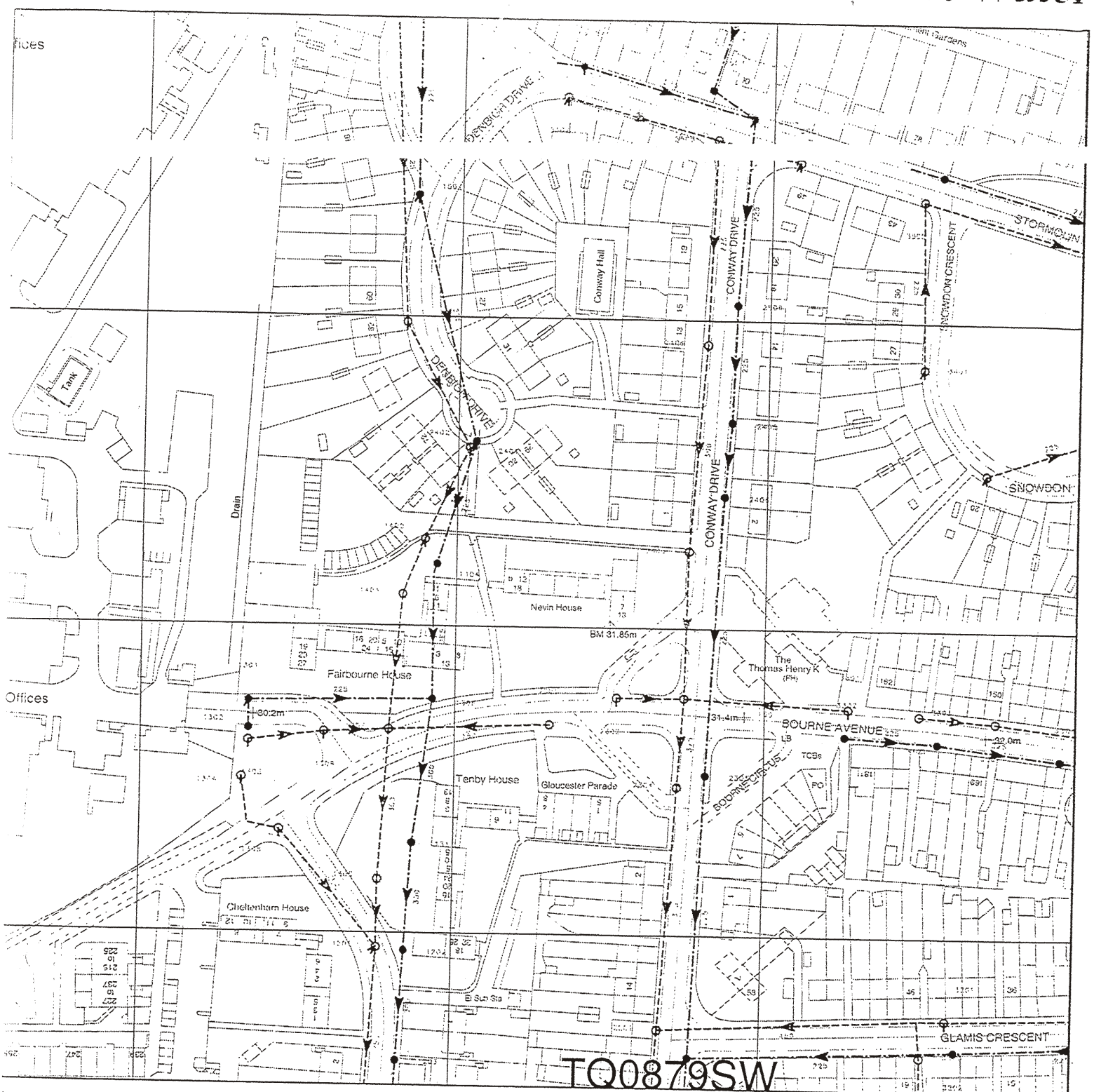

he position of the apparatus shown on this plan is given without obligation and warranty, and the accuracy cannot be guaranteed. Service pipes are not nown but their presence should be anticipated. No liability of any kind whatsoever is accepted by Thames Water for any error or omission. The actual osition of mains and services must be verified and established on site before any works are undertaken.

00 metre intervals

Thames Water Customer Enquiries Sewer Plan

COMMON SEWER TYPES

Foul Sewerage

Surface

Combined Sewerage

OTHER SEWER TYPES

Trade Effluent

Vent Pipe

Rising Foul

(c) COPYRIGHT: Unauthorised reproduction prohibited

entre: (508228 , 179423): TQ0879SW. Printed on 2 September 2003 at 15:11:08 by PFOSSEY.

...the Ordnance Survey map with the Sanction of the controller of H.M. Stationery Office, licence no. WT 298557. Crown Copyright Reserved.

Thames Water

TQ0879NW

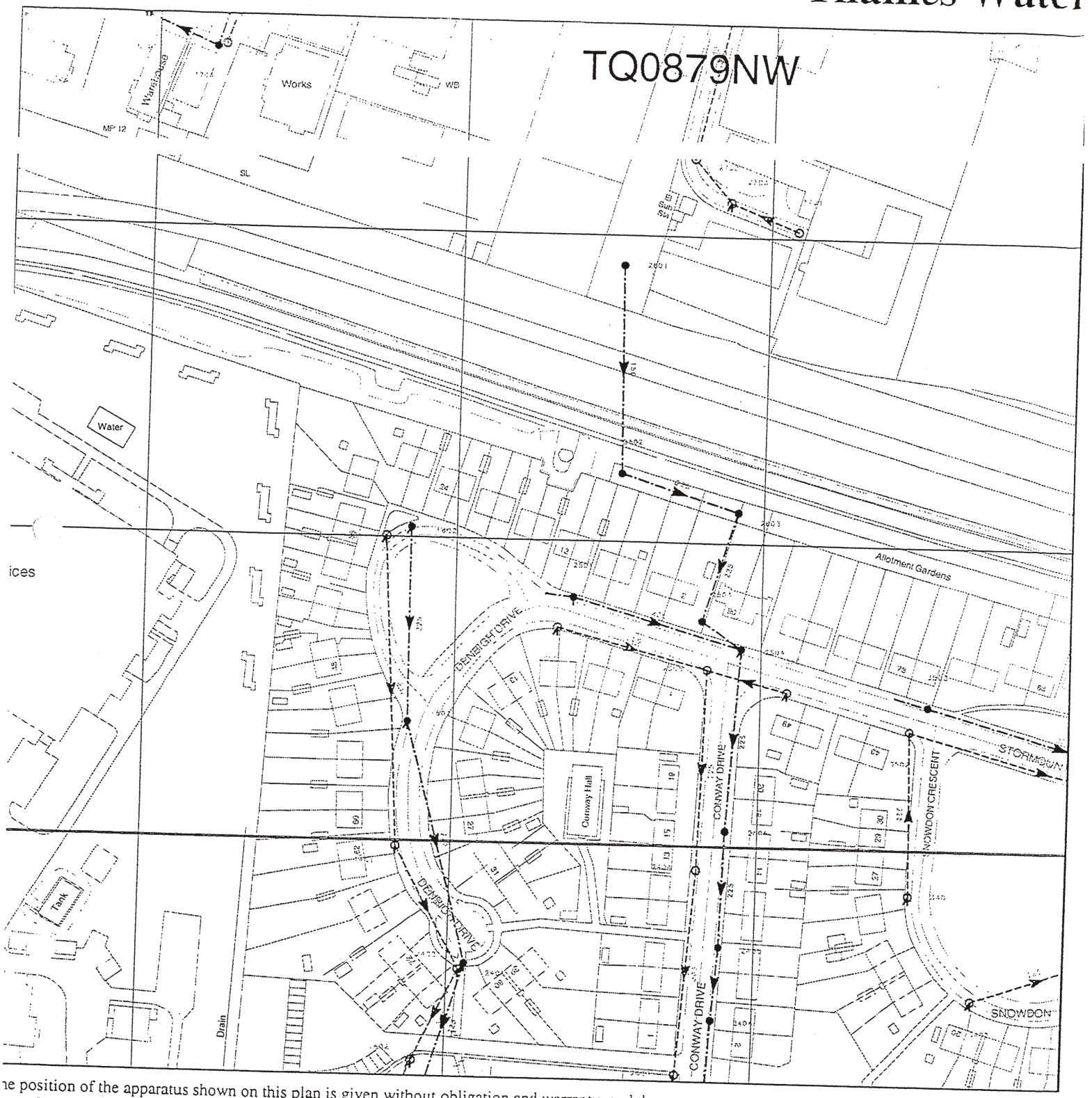

The position of the apparatus shown on this plan is given without obligation and warranty, and the accuracy cannot be guaranteed. Service pipes are not known but their presence should be anticipated. No liability of any kind whatsoever is accepted by Thames Water for any error or omission. The actual position of mains and services must be verified and established on site before any works are undertaken.

[redacted]

100 metre intervals

Thames Water Customer Enquiries Sewer Plan

COMMON SEWER TYPES

- Foul Sewerage
- Surface Water
- Combined Sewerage

OTHER SEWER TYPES

- Trade Effluent
- Vent Pipe
- Abandoned
- Pumping Main

(c) COPYRIGHT: Unauthorised reproduction prohibited

Centre: (508228 , 179595): TQ0879NW. Printed on 2 September 2003 at 15:10:59 by PFOSSEY.

Sewer Flooding

History Enquiry

Thames Water Property Searches
12
Vastern Road
Reading
RG1 8DB

Search address supplied Prologis Park
Heathrow
UB3 1SW

Your reference N/A

Our reference SFH_SFH_Standard_2013_2437154

Search date **26 March 2013**

Thames Water Utilities Ltd

Property Searches
PO Box 3189
Slough SL1 4WW

DX 151280 Slough 13

T 0118 925 1504
F 0118 923 6655/57
E searches@thameswater.co.uk
I www.thameswater-propertysearches.co.uk

Registered in England and Wales
No. 2366661, Registered office
Clearwater Court, Vastern Road
Reading RG1 8DB

Sewer Flooding

History Enquiry

Search address supplied: Prologis Park, Heathrow, UB3 1SW

This search is recommended to check for any sewer flooding in a specific address or area

TWUL, trading as Property Searches, are responsible in respect of the following:-

(i) any negligent or incorrect entry in the records searched;

(ii) any negligent or incorrect interpretation of the records searched;

(iii) and any negligent or incorrect recording of that interpretation in the search report

(iv) compensation payments

Thames Water Utilities Ltd

Property Searches
PO Box 3189
Slough SL1 4WW

DX 151280 Slough 13

T 0118 925 1504
F 0118 923 6655/57
E searches@thameswater.co.uk
I www.thameswater-propertysearches.co.uk

Registered in England and Wales
No. 2366661, Registered office
Clearwater Court, Vastern Road
Reading RG1 8DB

Sewer Flooding

History Enquiry

History of Sewer Flooding

Is the requested address or area at risk of flooding due to overloaded public sewers?

The flooding records held by Thames Water indicate that there have been no incidents of flooding in the requested area as a result of surcharging public sewers.

Although Thames Water does not have records of public sewer flooding within the vicinity, please be aware that property owners are not legally obliged to report this flooding to Thames Water. In addition flooding from private sewers, watercourses and highways drains are not the responsibility of Thames Water, and such incidents may not be noted in our records. We therefore strongly advise you to contact the current owners and occupiers of the premises and inquire about sewer flooding.

For your guidance:

- A sewer is "overloaded" when the flow from a storm is unable to pass through it due to a permanent problem (e.g. flat gradient, small diameter). Flooding as a result of temporary problems such as blockages, siltation, collapses and equipment or operational failures are excluded.
- "Internal flooding" from public sewers is defined as flooding, which enters a building or passes below a suspended floor. For reporting purposes, buildings are restricted to those normally occupied and used for residential, public, commercial, business or industrial purposes.
- "At Risk" properties are those that the water company is required to include in the Regulatory Register that is presented annually to the Director General of Water Services. These are defined as properties that have suffered, or are likely to suffer, internal flooding from public foul, combined or surface water sewers due to overloading of the sewerage system more frequently than the relevant reference period (either once or twice in ten years) as determined by the Company's reporting procedure.
- Flooding as a result of storm events proven to be exceptional and beyond the reference period of one in ten years are not included on the At Risk Register.
- Properties may be at risk of flooding but not included on the Register where flooding incidents have not been reported to the Company.
- Public Sewers are defined as those for which the Company holds statutory responsibility under the Water Industry Act 1991.
- It should be noted that flooding can occur from private sewers and drains which are not the responsibility of the Company. This report excludes flooding from private sewers and drains and the Company makes no comment upon this matter.
- For further information please contact Thames Water on Tel: 0845 9200 800 or website www.thameswater.co.uk

Thames Water Utilities Ltd

Property Searches
PO Box 3189
Slough SL1 4WW

DX 151280 Slough 13

T 0118 925 1504
F 0118 923 6655/57
E searches@thameswater.co.uk
I www.thameswater-propertysearches.co.uk

Registered in England and Wales
No. 2366661, Registered office
Clearwater Court, Vastern Road
Reading RG1 8DB

Appendix E – London Borough of Hillingdon correspondence and SFRA Extract

Local Development Framework
Technical Background Report
Strategic Flood Risk Assessment 2008

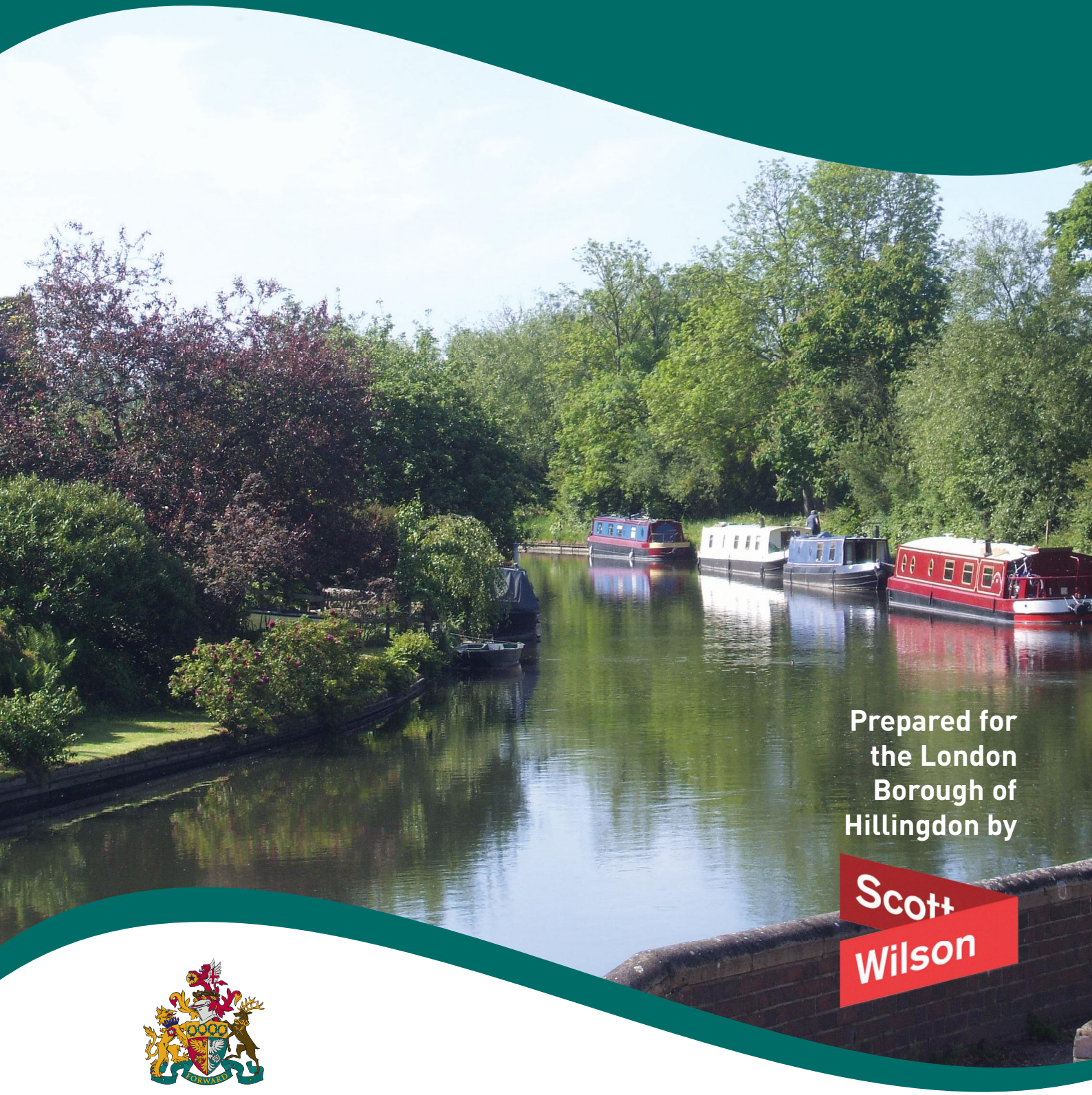

Prepared for the London Borough of Hillingdon by

Scott Wilson

HILLINGDON
LONDON

www.hillingdon.gov.uk

10 Site Specific FRA Guidance

Site specific flood risk assessments are required to assess the flood risk posed to proposed developments and to ensure that where necessary and appropriate, suitable mitigation measures are included in the development.

This section presents the recommendations for site specific flood risk assessments prepared for submission with planning applications in the Hillingdon administrative area.

The site specific flood risk assessment guidance presented in the following sections has been developed based on:

- the recommendations presented in Planning Policy Statement 25 and the consultation draft of the Practice Guide companion to PPS25;
- a review of the policies contained within the existing Unitary Development Plan for the London Borough of Hillingdon; and
- the information gathered through and findings of the Level 1 SFRA process.

10.1 When is a Flood Risk Assessment Required?

When informing developers of the requirements of a flood risk assessment for a development site, consideration should be given to the position of the development relative to flood sources, the vulnerability of the proposed development and its scale.

In the following situations a Flood Risk Assessment should always be provided with a planning application:

1 The development site is located in Flood Zone 2 or 3;

2 The proposed development site area is greater than 1 hectare (even if the site is located in Flood Zone 1). This is to ensure storm water generated by the site is managed in a sustainable manner and does not increase the burden on existing infrastructure and/or flood risk to neighbouring property);

3 The floor space of proposed non-residential development is greater than 1000m2 or the site areas is greater than 1 hectare;

4 The development site is located in an areas known to have experienced flooding problems from any flood source; and,

5 The development is located within 20m of top of bank of a main river watercourse regardless of Flood Zone classification.

To identify when the Environment Agency should be consulted on planning applications please refer to www.pipernetworking.com/floodrisk which presents a matrix detailing the Environment Agency's standing advice on flood risk assessment requirements for different types of development.

10.2 FRA Requirements

Annex E of PPS25 presents the minimum requirements for flood risk assessment. The Practice Guide Companion to PPS25 (consultation document) advocates a staged approach to site specific flood risk assessment with the findings from each stage informing the next iteratively throughout the development process. These documents describe when an FRA is required and advice on what should be contained within a site specific assessment.

10.3 Flood Risk Assessment Guidance Table

The Flood Risk Assessment Guidance Table (Table 10-1) provides guidance to developers and Local Authorities on the requirements of a FRA. In addition guidance can be obtained from www.pipernetworking.com/floodrisk and Annex E of PPS25 with respect to site specific Flood Risk Assessments.

Table 10.1 (end of section 10) provides a framework with which Local Authorities and Developers will be able to assess the requirements of each individual development with regard to flood risk.

10.3.1 Risks of Developing in Flood Risk Areas

Developing in flood risk areas can result in significant risk to a development and site users. Table 10.1 should identify the main flood risks posed to the site. Additional issues to consider include:

i. Failure to consider wider plans prepared by the Environment Agency or other operating authorities may result in a proposed scheme being objected to;

ii. Failure to identify flood risk issues early in a development project could result in failure of a development proposal, requiring redesign of the site to mitigate flood risk;

iii. Failure to adequately assess all flood risk sources and construct a development that is safe over its lifetime could increase the number

of people at risk from flooding and/or increase the risk to existing populations;

iv. Failure to mitigate the risk arising from development may lead to claims against the developer if an adverse effect can be demonstrated (i.e. flooding didn't occur prior to development) by neighbouring properties/residents;

v. Failure to assess residual risk of failure of flood defence infrastructure, or failure of other artificial sources;

vi. Properties may be un-insurable and therefore un-sellable if flood risk management is not adequately provided for the lifetime of the development;

vii. By installing SuDS without arranging for their adoption or maintenance the SuDS will eventually cease to operate as designed and may present a flood risk to the development and/or neighbouring property;

viii. The restoration of river corridors and natural floodplains can significantly enhance the quality of the built environment whilst reducing flood risk. Such an approach can significantly reduce the developable area of sites or lead to fragmented developments, however positive planning and integration throughout the master planning process should resolve these.

Advice from the Environment Agency's National Development Control Policy team on brownfield functional floodplain is that the Environment Agency will consider existing building footprints to be part of the functional floodplain, unless it can be proven that they exclude flood waters. If these buildings do exclude flood waters, then solely the area around these buildings will be deemed functional. When undertaking an FRA this matter should be clarified and ideally pre-agreed with the Environment Agency.

10.3.2 'Safe' Development

The following items should be addressed as part of a Flood Risk Assessment in order to demonstrate that proposed developments are 'safe' in line with PPS25:

- 'Safe' access/egress for 'more vulnerable' and 'highly vulnerable' uses is dry. Dry escape for residential dwellings should be up to the 1 in 100 year event taking into account climate change.

- The Environment Agency have specifically suggested that 'Safe' should preferably be dry for other uses such as educational establishments and 'less vulnerable' land use classifications.
- For ‘More Vulnerable’ and ‘Highly Vulnerable’ finished floor levels should be set 300mm above the 1 in 100 year plus climate change level.
- Where floodplain compensation is undertaken the Environment Agency requires this is on a ‘Level for Level, Volume for Volume Basis’.
- Flood flow routes should be preserved.
- Flood resilient constructions measures should be incorporated into new developments.

Figure 5 demonstrates the location structures and defences using the National Flood Coastal Defence Database (NFCDD), this should be used as a reference point to identify key structures which may become blocked during times of flood and cause increased flood risk as part of a site specific FRA.

10.3.3 Groundwater Flood Risk Areas

In areas at risk of ground water flooding a site specific flood risk assessment should assess the level of risk to the site. Local groundwater monitoring should be identified and where possible analysed to assess ground water levels as part of a Flood Risk Assessment.

10.3.4 Surface Water Flood Risk Areas

In areas at risk of surface water flooding, development should seek to reduce surface water runoff rates as a result of development. Furthermore, the appropriate application of sustainable drainage systems (where possible) to reduce the overall level of flood risk in the area through the outlay and form of the development would be required. Figure 4 (page 97) shows the areas assessed to be at risk of flooding from overland flow and this should be investigated further as part of a site specific FRA.

10.3.5 Artificial Source/Infrastructure Failure Flood Risk Areas

Artificial sources of flooding within a 1km radius of the any site should be considered in order to assess the residual risk of a water body overtopping and potential flow paths. Reservoir or canal flooding may occur as a result of the facility being overwhelmed and/or as a result of dam or bank failure and therefore a crude assessment of flood flow routes should be assessed.

If a perched waterbody is in close proximity, where possible a cross section should be taken in relation to the proposed site, showing level of the waterbody and its water level. More specifically areas in proximity to the Ruislip Lido and Colne Lakes system should consider the residual risks further as part of a site specific FRA.

10.3.6 Riverside Development

i. Main River (for Main Rivers in Hillingdon see section 1.1.2)

Under the terms of the Water Resources Act 1991 and the Land Drainage Byelaws 1981, the prior written consent of the Environment Agency is required for any proposed works or structures in, under, over or within 8 meters of the brink of a Main River. Furthermore the Environment Agency would seek an 8 metre wide undeveloped buffer strip alongside main rivers and would also ask to developers to explore opportunities for river restoration as part of the development.

ii. Ordinary watercourses[5]/canals

The Environment Agency requires a 5 metre undeveloped buffer strip alongside such watercourses. This is to allow access for maintenance and encourage conservation and wildlife habitat.

iii. De-culverting

The Environment Agency would seek de-culverting as part of any development next to a culverted river. If de-culverting was not technically feasible the Environment Agency would require a minimum of a 4 metre setback from the culvert for access/maintenance. Any proposals of further culverting or the placing of buildings over a culvert should be strongly discouraged.

Figure 5 (page 98) of the NFCDD shows existing structures. Figure 5 should be used in conjunction with the large scale flood risk maps (Figures 3- 4) as a reference point to identify any potential structures that could result in increased flood risk within the area and could benefit from de-culverting in future.

iv. Brownfield Functional Floodplain

The following criteria apply to development in the brownfield functional floodplain:

[5] Ordinary watercourses are statutory watercourses that are not classified as main rivers.

- Buildings, unless permeable to floodwaters, are not considered to be part of the functional floodplain. Land/infrastructure around these buildings is considered to be functional.
- The Environment Agency states that the following measures should be considered to reduce risk on these sites:
    - Removal of buildings and restoration of natural floodplain;
    - Change of use to a less vulnerable classification;
    - Reduced building footprints;
    - Preservation of flow routes;
    - Improved conveyance/storage, replacing solid building with building on stilts;
    - Meeting the objectives of the Thames Catchment Flood Management Plan (Summary Document Jan 2007, available at www.environment-agency.gov.uk);
    - Adopting a sequential approach to design of the site using the principles of 'Making Space for Water' (DEFRA 2004 and ongoing, available at http://www.defra.gov.uk/environ/fcd/policy/strategy.htm)

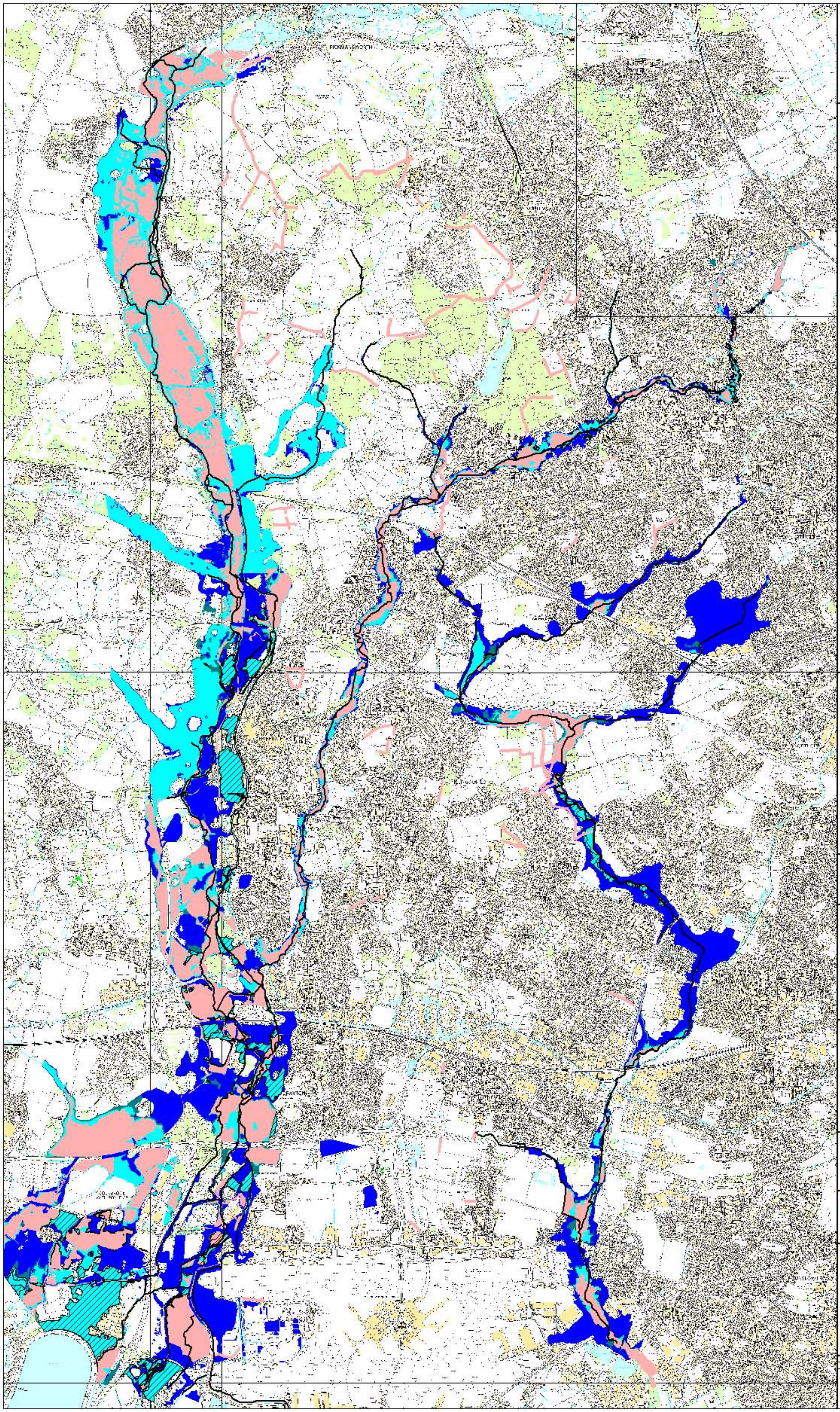

THIS DRAWING MAY BE USED ONLY FOR THE PURPOSE INTENDED AND ONLY WRITTEN DIMENSIONS SHALL BE USED

Legend

- Flood Zone 3b
- Flood Zone 3a
- Flood Zone 3a + Climate Change
- Flood Zone 2
- Areas Benefiting from Defences
- Main River

©

This map is reproduced from Ordance Survey material with the permision of Ordance Survey on behalf of the Controller of Her Majesty's Stationary Office.

© Crown copyright

Scott Wilson

GD0100031673 2006

Drawing Status

FINAL

Job Title

London Borough of Hillingdon SFRA

Drawing Title

Fluvial Sources of Flood Risk

Scale at A3

1:50000

Drawn	Approved
MK	JR

Scott Wilson

Drawing Number

Figure 3

RICKMANSWORTH
WATFORD RURAL CP
NORTHWOOD
CHALFONT ST PETER CP
GERRARDS CROSS
GERRARDS CROSS CP
DENHAM CP
RUISLIP
PINNER
FULMER CP
UXBRIDGE
NORTHOLT
HILLINGDON LB
HILLINGDON
WEXHAM CP
IVER CP
HAYES
IVER
YIEWSLEY
SOUTHALL
WEST DRAYTON
COLNBROOK WITH POYLE CP
HORTON CP
Heathrow Airport London
HOUNSLOW LB
HOUNSLOW
WRAYSBURY CP
FELTHAM

FINAL

LONDON BOROUGH OF HILLINGDON SFRA

OTHER SOURCES OF FLOOD RISK

- London Borough of Hillingdon
- Groundwater Flooding
- Artificial Water Bodies
- Area of high relief possibly susceptible to overland flow

The data is reproduced from Ordnance Survey material with the permission of Ordnance Survey on behalf of the Controller of Her Majesty's Stationery Office

© Crown copyright

Unauthorised reproduction infringes Crown copyright and may lead to prosecution or civil proceedings.

Scott Wilson 0100100321972 2007

FIGURE 4

Scale at A3: 1:10,000

TD | HR

Scott Wilson
Scott House
Basingstoke
Hampshire, RG21 4JG
Tel 01256 310200
Fax 01256 310201
www.scottwilson.com

THIS DRAWING MAY BE USED ONLY FOR THE PURPOSE IN RESPECT WHICH IT WRITTEN OWERS/BOARD SHALL BE USED

Appendix F – Masterplan – Michael Sparks Associates, Drawing No. 30587-PL101

01/101 SITE LAYOUT PLAN

1:1000

NOTES:

SUBJECT TO STATUTORY CONSENTS

BASED ON GREENHATCH SURVEY NO. 7159ENT_1

BASED ON OS MAP REPRODUCED BY PERMISSION OF CONTROLLER OF HM STATIONARY OFFICE (c) CROWN COPYRIGHT

COPYRIGHT RESERVED

BOUNDARIES BASED ON LAND REGISTRY TITLE NUMBER MX131015

ADOPTED HIGHWAY BOUNDARY BASED ON INFORAMTION RECEIVED FROM LONDON BOROUGH OF HILLINGDON

NORTH

0 25 50 100 m

REV	DATE	COMMENT	DRAW	CHCK
–	18.12.12	FIRST ISSUE	VCN	PW

MICHAEL SPARKS ASSOCIATES
CHARTERED ARCHITECTS
11 PLATO PLACE
ST.DIONIS ROAD
LONDON SW6 4TU
TELEPHONE 020 7736 6162
FAX 020 7736 3896
info@msa-architects.co.uk

PROLOGIS

TITLE
PROLOGIS PARK, HEATHROW

DRAWING
SITE LAYOUT PLAN

CLIENT
PROLOGIS UK LTD.

DATE	SCALE	DRAWN
NOVEMBER 2012	1:1000 @ A1	PW
	STATUS: FOR PLANNING	CHECKED: PW

DRAWING NUMBER
30587-PL101

Appendix G – Topographical Survey – GreenHatch Group Drawing No.14285-OGL

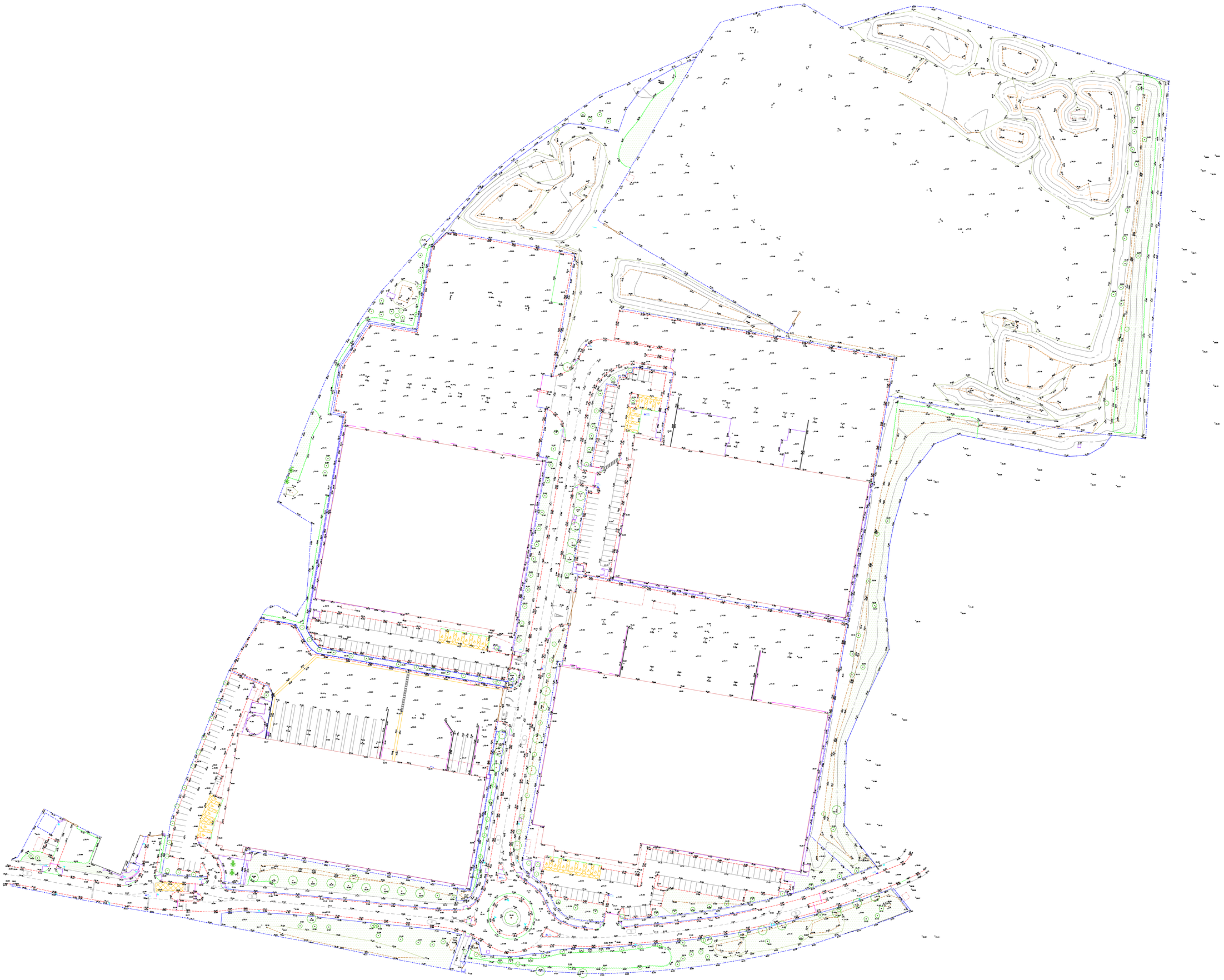

N

Station Information:

Station	Easting (m)	Northing (m)	Level (m)
L1	508021.141	179302.175	31.163
L2	507950.501	179284.560	31.663
L3	507876.741	179275.289	31.335
L3A	507903.769	179292.608	31.654
L4	507856.250	179300.220	32.367
L5	507736.700	179295.877	32.462
L6	507701.671	179292.527	33.847
L7	507874.726	179391.586	32.387
L8	507894.032	179533.075	31.648
L9	507724.829	179315.519	32.770
L9A	507899.071	179470.926	31.574
L10	507734.180	179377.735	32.709
L10A	507919.624	179502.654	31.932

Note:

Some services may have been omitted due to parked vehicles. The Ordnance Survey tile is to be used as a guide only.

OS Buildings *Surveyed Buildings*

This survey has been orientated to the Ordnance Survey (O.S) National Grid (OSGB36) via a Global Position System (GPS) and the O.S. Active Network (OS Net).

A true OSGB36 coordinate has been established near to the site centre via a transformation using the OSTN02 & OSGM02 transformation models.
The survey has been correlated to this point and a further one or more OSGB36 points established to create a true O.S. bearing for angle orientation.

No scale factor has been applied to the survey therefore the coordinates shown are arbitrary & not true O.S. Coordinates which have a scale factor applied.

Please refer to Survey Station Table to enable establishment of the on-site grid.

Legend:

	Buildings / walls		
	Kerb line		
	Edge of surface		
	Canopy / Overhang	AC	Air Conditioning Unit
	Line Marking	TT	Tar / Tin Panel
	Centre Line	Elec	Electric
	Barrier	BT	British Telecom
	Hedge	Fh	Fire Hydrant
	G.S. Fence + Chainlink Fence	St	Stop tap
	Panel Fence	Sv	Stop valve
	P.R. Fence + Post & Rail	Wp	Wash Out
	Overhead Powerline	Wm	Water Meter
	Chamber	Mkr	Service Marker
	Woodland	Re	Building eye
		R/wall	Retaining wall
	Station and Name	Cmp	Cable Marker
		Lp	Lamp Post
100.000	Station Level	Sp	Sign Post
BM 100.00	Benchmark	Ep	Electricity Post
BH 1		Tp	Telegraph Post
	Borehole	TL	Traffic light
		Bs	Bus Stop
TH 1	Trial Hole	Fl	Floodlight
		Fp	Flagpole
	Tree / Bush / Sapling	Pb	Post box
		Lb	Litter Bin
	Area of Undergrowth	Bolt	Bollard
		CPS	Concrete Paving Slabs
	Gate	Fs	Flagstaff
IC	Inspection chamber	WL	Water level
CL	Cover level	Ht	Height
IL	Invert level	IFL	Internal floor level
P.Inv ø0.25	Pipe invert (diameter)	THL	Threshold level
Gy	Gully	Re	Building Eye
Bg	Back Gully	Dk	Drop kerb
MH	Manhole	Gas	Gas
		Er	Earth rod

Rev	Date	Description	Drawn	Q. Ref.

greenhatch group

Topographical Surveys
Site Engineering

Measured Building Surveys
3D Laser Scanning

Rowan House
Duffield Road
Little Eaton
Derby
DE21 5DR
Tel (01332) 830044 Fax (01332) 830055
admin@greenhatch-group.co.uk

CLIENT

Michael Sparks Associates

PROJECT

Prologis Park Hayes

TITLE

Topographical Survey

SCALE	DATE	DRAWN	QUALITY REF
1: 500	March/April 10	LP	FO550

Level datum	O.S (GPS Verified)
Grid orientation	O.S (GPS Verified)
Job number	14285

Drawing No.	Rev.
14285_OGL	0

Comments

This plan should only be used for its original purpose. GreenHatch Ltd accepts no responsibility for this plan if supplied to any party other than the original client.

All dimensions should be checked on site prior to design and construction.

Drainage information (where applicable) has been visually inspected from the surface and therefore should be treated as approximate only.

Notes:

DO NOT SCALE

©Copyright Greenhatch Group. 01/01/08

Appendix H – Drainage Strategy Drawing No. 2721-D-01-A and WinDes Calculations

WSP Property and Development

CALCULATION LOG SHEET

Project Name	**ProLogis Park, Heathrow**		
Project No	11012721	Office of origin	Basingstoke
Calculation Title	**Outline Preliminary Drainage Strategy Calculations**		
Prepared by	Joe Tang	Date	10/04/2013
Checked by	Gerald Guma	Date	10/04/2013
Approved by	Alastair Atkinson	Date	

Rev	Amendment	By	Date	Checked	Approved
A	Greenfield Runoff Rates	JT	08/04/2013	GG	
A	Modified Rational Calculations	JT	08/04/2013	GG	
A	WinDes Cellular Storage Calcs	JT	09/04/2013	GG	

ICP SUDS Mean Annual Flood

Input

Return Period (years)	100	Soil	0.300
Area (ha)	3.480	Urban	0.000
SAAR (mm)	655	Region Number	Region 6

Results l/s

QBAR Rural	5.9
QBAR Urban	5.9
Q100 years	18.7
Q1 year	5.0
Q30 years	13.3
Q100 years	18.7

©1982-2013 Micro Drainage Ltd

Proposed Surface Water Runoff Rates – Modified Rational Method

$$Q = 2.78iA$$

Where by:

Q = Discharge Rate/Flow (l/s)
i = Rainfall Intensity (mm/hr)
A = Impermeable Area (hectares)

Rainfall Intensities for various Return Periods
(TRRL Report LR 595 '*Transport Road and Research laboratory*')
i_1 = 50 mm/hr
i_{30} = 113.02 mm/hr
i_{100} = 143.9 mm/hr

Therefore:
Q_1 = 2.78 × 50 × 3.48 = 483.72 l/s

Q_{30} = 2.78 × 113.02 × 3.48 = 1093.4 l/s

Q_{100} = 2.78 × 143.9 × 3.48 = 1392.1 l/s

Q_{100+30} = 2.78 × 143.9 × 3.48 × 30% = 1809.7 l/s

Summary:

The surface water runoff calculations have been based on the proposed development impermeable areas, which indicate that there would be a significant increase in surface water generated by the site, when comparing against the existing Greenfield situation. However, it is foreseen to drain the proposed development via infiltration directly into the ground meaning there will be no outfalls required for the site reducing the discharge rates to 0 l/s.

Quick Storage Estimates – Infiltration SuDS

Application Site Location: OS Grid Ref (508002, 179580)
Proposed Impermeable Area: 3.48ha
Assumed Infiltration Rate: $1x10^{-6}$m/s (=0.0036m/hr)

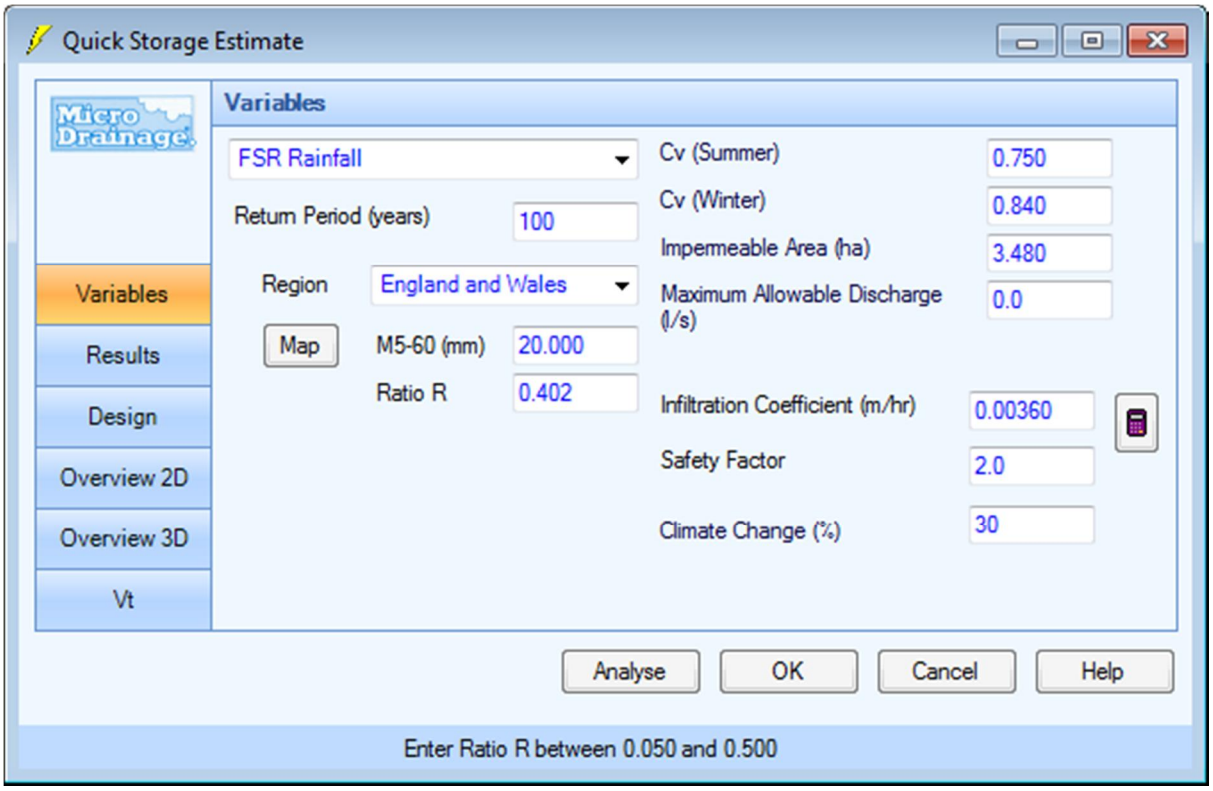

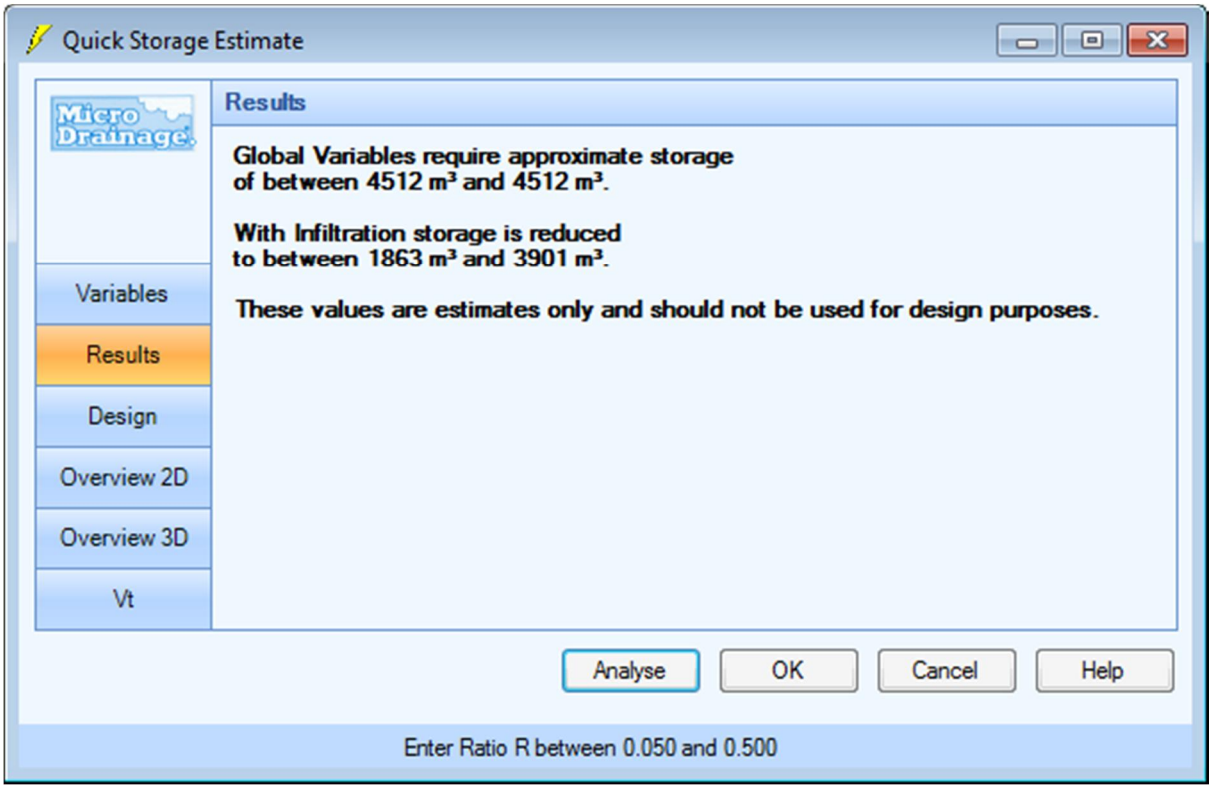

Maximum Storage Volume Required for an Infiltrating System is = 3901m^3

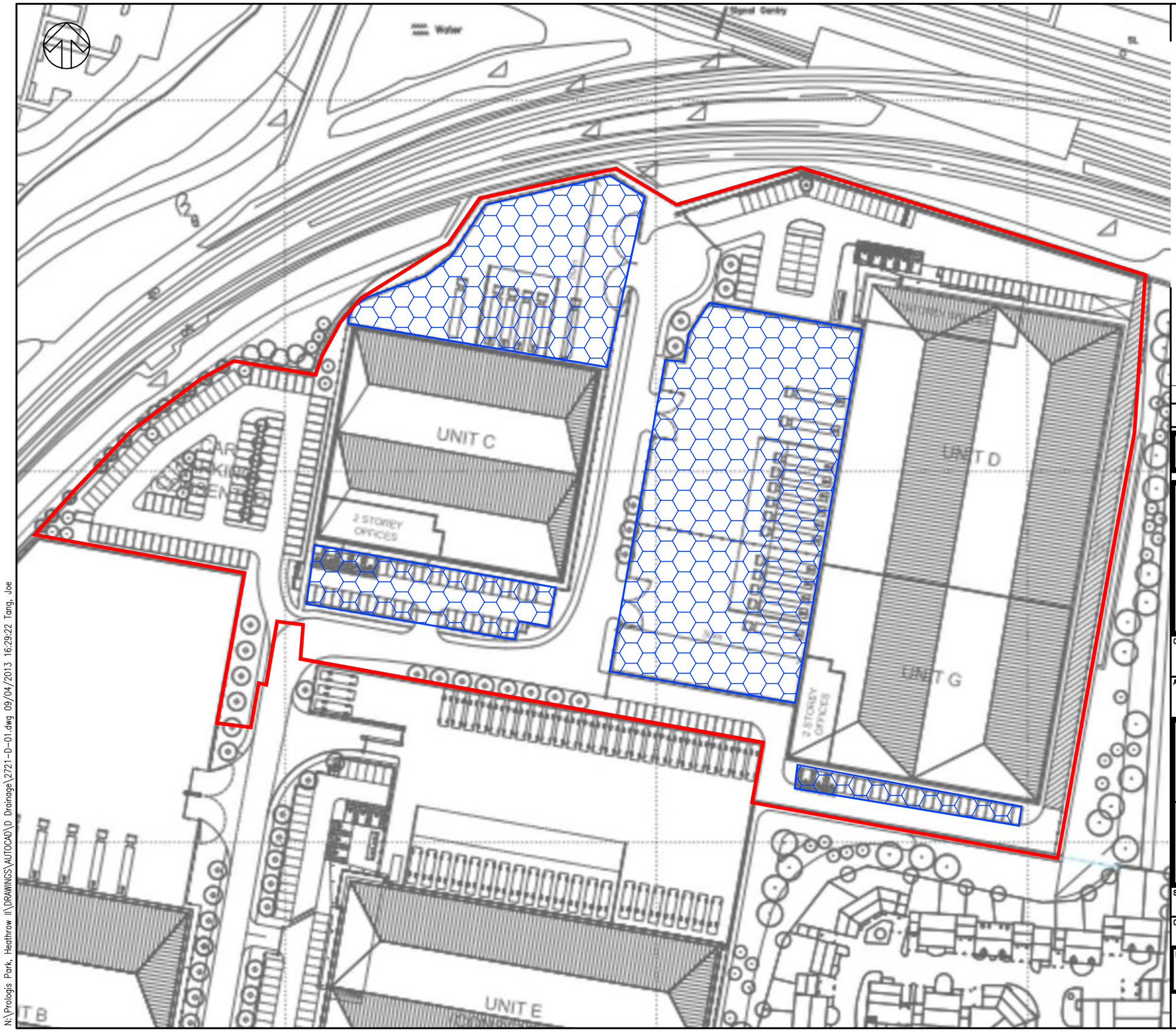

DO NOT SCALE

KEY

SITE BOUNDARY (approx. 3.48ha)

PROPOSED INFILTRATING CELLULAR STORAGE (Total Area = 0.89ha)

REV	DATE	BY	DESCRIPTION	CHK	APD
A	10/04/2013	JT	FIRST ISSUE	GG	ALA

DRAWING STATUS:
FOR INFORMATION ONLY

WSP
Mountbatten House, Basing View, Basingstoke, Hampshire RG21 4HJ
Tel: +44 (0)1256 318800 Fax: +44 (0)1256 318700
http://www.wspgroup.com

CLIENT:
PROLOGIS UK LTD.

ARCHITECT:
MICHAEL SPARKS ASSOCIATES

PROJECT:
PROLOGIS PARK
HEATHROW

TITLE:
PROPOSED PRELIMINARY OUTLINE
DRAINAGE STRATEGY

SCALE @ A3:	CHECKED:	APPROVED:
N.T.S.	GG	ALA
CAD FILE:	DESIGN-DRAWN:	DATE:
2721-D-01	JT	April 2013

PROJECT No:	DRAWING No:	REV:
11012721	2721-D-01	A

© WSP Group Ltd

N:\Prologis Park, Heathrow II\DRAWINGS\AUTOCAD\D Drainage\2721-D-01.dwg 09/04/2013 16:29:22 Tang, Joe

WSP UK Limited
Mountbatten House
Basingstoke
RG21 4HJ
UK
Tel: +44 (0)12 5631 8882
Fax: +44 (0)12 5631 8700
www.wspgroup.co.uk

UNITED BY OUR DIFFERENCE
WSP

NOTES

1) This drawing is to be read in conjunction with all relevant Architects and Engineers drawings and specifications.

2) Any discrepancies in dimensions or details, or between these drawings should be drawn to the attention of the Architect and/or the Engineer in writing for clarification.

3) The contractor is to verify all levels prior to the commencement of any site works.

4) Refer to Architects drawings for all setting out.

5) Refer to site investigation report for ground conditions.

6) The formation shall be proof rolled in all cases (Refer Specification).

7) In areas of clay formation a suitable robust geotextile shall be placed at formation and the sub base increased to 300mm minimum.

KEY:

- SURFACE WATER DRAINAGE
- FOUL WATER DRAINAGE
- SURFACE WATER RISING MAIN
- FOUL WATER RISING MAIN
- RH RAINWATER HARVESTING
- FP FOUL PUMP
- SWP SURFACE PUMP
- PI PETROL INTERCEPTOR
- DENOTES EXISTING SOAKAWAY TO BE RETAINED
- DENOTES EXISTING SOAKAWAY TO BE REMOVED
- DENOTES PROPOSED REPLACEMENT SOAKAWAY

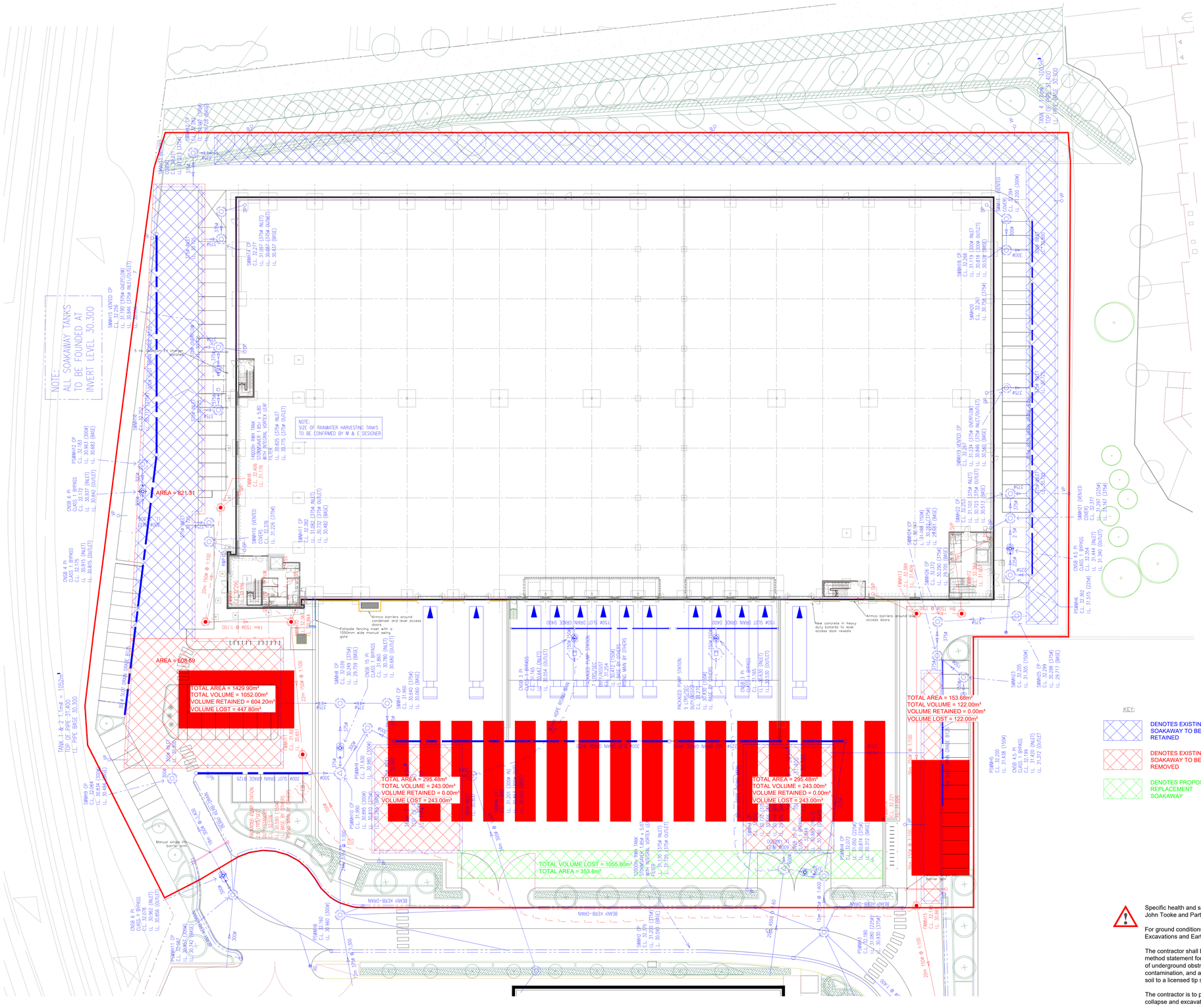

Specific health and safety advise is contained in the site investigation report and John Tooke and Partners specification for Excavations and Earthworks.

For ground conditions refer to the site investigation report and the specification for Excavations and Earthworks.

The contractor shall be vigilant when carrying out excavations and shall prepare a method statement for drainage and reduced level excavations including the removal of underground obstructions, inspection of excavations for any unexpected contamination, and a procedure for sample, testing and disposal of contaminated soil to a licensed tip should it be encountered and deemed necessary.

The contractor is to provide trench supports to drainage excavations to prevent collapse and excavations should be barriered off to prevent falls.

The contractor shall prepare a method statement for connections to existing sewers including working in confined spaces.

The position of existing underground services shall be determined prior to commencement of work on site.

The site investigation report did not identify any significant contamination or evidence of the presence of Asbestos containing materials.

Working in confined spaces.
The site investigation report identified the presents of ground gas.

TENDER ISSUE

REV	AMENDMENTS	DATE
T1	Tender issue	10 Aug 2022

Virtus

DATE May 2022

Virtus
London14

SCALE 1:250 @ A0

DRAWN BY SM

External Works
Proposed Drainage Layout

DRG No
3887 / 502 T1

JOHN TOOKE & PARTNERS
CONSULTING ENGINEERS
Ground Floor, The Old Oast, Coldharbour Lane,
Aylesford, Kent, ME20 7NS
Telephone 01622 585750

DRAINAGE NOTES

1) This drawing is to be read in conjunction with all relevant Architects and Engineers drawings and specifications.

2) Any discrepancies in dimensions or details, or between these drawings should be drawn to the attention of the Architect and/or the Engineer in writing for clarification.

3) The contractor is to verify locations, invert levels and diameter of existing drainage at tie-in points prior to the commencement of any site works.

4) All drainage works are to be installed in accordance with BS.8301/BS.EN.752.

5) Reference is to be made to the specification documents for materials and installation details.

6) This drawing is to be used for drainage information only.

7) Refer to Architects drawings for building and drainage setting out.

8) For foundation details see drawing number 3887/--- & ---.

9) Refer to site investigation report for ground conditions.

10) All excavations in excess of one metre deep are to have trench supports.

11) Trench excavations to be kept dry at all times.

12) For manhole and drainage installation details see standard drawing numbers SD/5-- etc.

13) All foul water drainage to be 100Ø @ 1:40 min. unless noted otherwise. All surface water drainage to b

14) All foul and ...e.

15) All drainage

16) All invert lev

17) Full Retenti... sensor / ...turer's ...t's
silt probe. T...
Installation ...
drawings. F...

18) All redundar... ...thority.

19) All drainage ...vel.

20) The contrac... ...d up to
the start / h... ...st there
are no live

21) Soakaway ... with the
HGV loadin...
manufacture...
Soakaways ... ...site boundary.
Note: An ad... ...meable
is to be inst...

22) All channel
buckets.

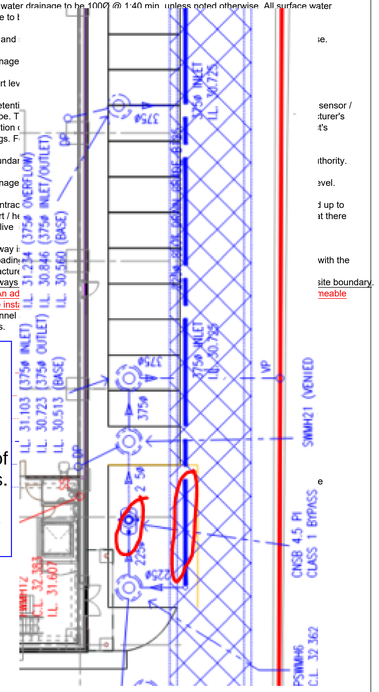

Soakaway picking up rainwater down pipes from Roof

Missing in this area is highway drainage, an interceptor maybe required due to the size of the parking bays

Soakaway picking up rainwater from highway

Soakaway picking up rainwater from highway and roof

EXISTING SOAKAWAY No.4 TO BE RETAINED

Missing in this area is highway drainage, an interceptor maybe required due to the size of the parking bays.

Is the existing to be retained

EXISTING SOAKAWAY Nos 1 - 2 TO BE ADJUSTED

REMOVE EXISTING SOAKAWAY STRUCTURE TO THIS LINE OF JOINTS AND REPLACE ENDS TO MATCH EXISTING

SUBSTATION
PART OF EXISTING SOAKAWAY Nos 1 - 2 TO BE REMOVED

S.S.L. 32.550≈

F.F.L. / S.S.L. 32.375≈

T.O.P. 32.375≈

EXISTING DRAINAGE CHANNEL TO BE RETAINED AND OUTLETS ADJUSTED TO SUIT DRAINAGE RUN

EXISTING DRAINAGE CHANNEL TO BE RETAINED AND ENCLOSED IN PFC UNDER PLINTHS. REFER DETAIL

Solum to be blinded, sealed and laid at 1:80 fall to existing channel drain

Solum to be blinded, sealed and laid at 1:80 fall to existing channel drain

MOVE A.C. CLEAR OF PLINTHS

EXTEND EXISTING CHANNEL AND FIT NEW A.C. TO END

NEW 150mm OUTLET ON EXISTING TAIL

EXISTING SOAKAWAY No 3 TO BE REMOVED

EXISTING SOAKAWAY No 6 TO BE REMOVED

EXISTING SOAKAWAY No 5 TO BE REMOVED

Interceptor picking up external plant slab, substation and highway

Interceptor picking up external generator slab and highway

SPEL CLASS 1 FULL RETENTION SEPARATOR P400/1C/ESR

SPEL RETENTION SEPARATOR P150/1C/ESR

Replacement Soakaway:
76.800 x 16.800 x 0.914m deep
= 1179 x 97% = 1143m³ cellular soakaway
Aco Stormbrixx HD 900 or similar approved to be installed in accordance with manufacturers recommendations, wrapped in a permeable membrane, be capable of supporting HGV loadings and located 5.0m minimum from foundations and site boundary.
Cover Level = 32.050 to 31.900
Top Side Level = 31.214
Invert Level = 30.300
Note: An additional layer of 500mm granular free draining sub-base wrapped in a permeable is to be installed below the soakaway and extend 500mm beyond the sides

Tender Issue

REV	AMENDMENTS	DATE
T4	Foul manhole CL's adjusted.	25/05/23
T3	Note 21 revised, catchpits added and manhole renumbered.	24/05/23
T2	Drainage revised as highlighted.	22/05/23
T1	Note added to soakaway and Separator model and adjoining drainage revised to remove clash with generator plinth.	11/05/23

DATE Oct 2022

Virtus London 14
Proposed Data Centre

SCALE 1:200 @ A0

DRAWN BY SM

External Works
Proposed Drainage Layout

DRG No
3887 / 601 T4

JOHN TOOKE & PARTNERS
CONSULTING ENGINEERS
Ground Floor, The Old Oast, Coldharbour Lane,
Aylesford, Kent, ME20 7NS
Telephone 01622 585750

DRAINAGE NOTES

1) This drawing is to be read in conjunction with all relevant Architects and Engineers drawings and specifications.

2) Any discrepancies in dimensions or details, or between these drawings should be drawn to the attention of the Architect and/or the Engineer in writing for clarification.

3) The contractor is to verify locations, invert levels and diameter of existing drainage at tie-in points prior to the commencement of any site works.

4) All drainage works are to be installed in accordance with BS.8301/BS.EN.752.

5) Reference is to be made to the specification documents for materials and installation details.

6) This drawing is to be used for drainage information only.

7) Refer to Architects drawings for building and drainage setting out.

8) For foundation details see drawing number 3887/--- & ---.

9) Refer to site investigation report for ground conditions.

10) All excavations in excess of one metre deep are to have trench supports.

11) Trench excavations to be kept dry at all times.

12) For manhole and drainage installation details see standard drawing numbers SD/5-- etc.

13) All foul water drainage to be 100Ø @ 1:40 min. unless noted otherwise. All surface water drainage to be 150Ø @ 1:150 min. unless noted otherwise.

14) All foul and surface water drainage is to be laid with level soffits unless noted otherwise.

15) All drainage with less than 1.2m cover is to be fitted with a concrete surround.

16) All invert levels are to the outgoing pipe unless noted otherwise.

17) Full Retention Separators are to be Class 1, alarmed (mains) and fitted with oil level sensor / silt probe. The separator is to be vented and installed in accordance with the manufacturer's Installation details. For position of separator panel and vent stack refer to the Architect's drawings. For electrical supply refer to M & E drawings.

18) All redundant drainage is to be grubbed-up or sealed to the satisfaction of the local authority.

19) All drainage is to be fitted with access points immediately above finish floor / ground level.

20) The contractor is to carry out a survey of the existing sewers / drains to be abandoned up to the start / head of the run which may extend beyond the site boundary to establish that there are no live incoming connections prior to commencement of any site works.

21) Soakaway is to be Aco StormBrix HD or similar approved, be capable of supporting HGV loadings, wrapped in a permeable membrane and to be installed in accordance with the manufacturer's details and recommendations.
Soakaways are to be located a minimum of 5m from roads, building foundations and site boundary.
Note: An additional layer of 500mm granular free draining sub-base wrapped in a permeable is to be installed below the soakaway and extend 500mm beyond the sides

22) All channel and kerb drains to be roddable and fitted with silt traps and removable silt buckets.

- Proposed Foul Water drainage network
- Existing Foul Water drainage network
- Existing Foul Water drainage network to be grubbed-up. See Note 19.
- Proposed Surface Water drainage network
- Existing Surface Water drainage network
- Existing Surface Water drainage network to be grubbed-up. See Note 19.

EXISTING SOAKAWAY No.4 TO BE RETAINED

EXISTING SOAKAWAY Nos 1 - 2 TO BE ADJUSTED

REMOVE EXISTING SOAKAWAY STRUCTURE TO THIS LINE OF JOINTS AND REPLACE ENDS TO MATCH EXISTING

SUBSTATION
PART OF EXISTING SOAKAWAY Nos 1 - 2 TO BE REMOVED

PACKAGE PUMP STATION, DUTY / STANDBY FLOW RATE 25l/s. CL = 31.450 IL IN = 29.975

Solum to be blinded, sealed and laid at 1:80 fall to existing channel drain

INSTALL NEW 300Ø OUTLET ON EXISTING CHANNEL DRAIN

EXISTING DRAINAGE CHANNEL TO BE RETAINED AND ENCLOSED IN PFC UNDER PLINTHS. REFER DETAIL

EXISTING DRAINAGE CHANNEL TO BE RETAINED AND AND OUTLETS ADJUSTED TO SUIT DRAINAGE RUN

MOVE A.C. CLEAR OF PLINTHS

EXTEND EXISTING CHANNEL AND FIT NEW A.C. TO END

EXISTING SOAKAWAY No 3 TO BE REMOVED

EXISTING SOAKAWAY No 6 TO BE REMOVED

EXISTING SOAKAWAY No 5 TO BE REMOVED

NEW GULLY ON EXISTING DRAINAGE CHANNEL

REMOVE EXISTING MANHOLE AND EXTEND EXISTING PIPE

SPEL CLASS 1 FULL RETENTION SEPARATOR P400/1C/ESR

SPEL CLASS 1 FULL RETENTION SEPARATOR P150/1C/ESR

NEW 150mm OUTLET ON EXISTING TAIL

Replacement Soakaway:
78.800 x 16.800 x 0.914m deep
= 1179 x 97% = 1143m³ cellular soakaway
Aco Stormbrixx HD 900 or similar approved to be installed in accordance with manufacturers recommendations, wrapped in a permeable membrane, be capable of supporting HGV loadings and located 5.0m minimum from foundations and site boundary.
Cover Level = 32.050 to 31.900
Top Side Level = 31.214
Invert Level = 30.300
Note: An additional layer of 500mm granular free draining sub-base wrapped in a permeable is to be installed below the soakaway and extend 500mm beyond the sides

F.F.L. / S.S.L. 32.375≈

T.O.P. 32.375≈

S.S.L. 32.550≈

Tender Issue

REV	AMENDMENTS	DATE
T4	Foul manhole CL's adjusted.	25/05/23
T3	Note 21 revised, catchpits added and manhole renumbered.	24/05/23
T2	Drainage revised as highlighted.	22/05/23
T1	Note added to soakaway and Separator model and adjoining drainage revised to remove clash with generator plinth.	11/05/23

Virtus London 14
Proposed Data Centre

DATE Oct 2022
SCALE 1:200 @ A0
DRAWN BY SM

External Works
Proposed Drainage Layout

DRG No
3887 / 601 T4

JOHN TOOKE & PARTNERS
CONSULTING ENGINEERS
Ground Floor, The Old Oast, Coldharbour Lane,
Aylesford, Kent, ME20 7NS
Telephone 01622 585750

Appendix 03-04 Generator Flue Design

ALL MATERIALS TO BE GRADE S355 UNLESS NOTED OTHERWISE	GENERAL TOLERANCE +/- 1.0mm	IF IN DOUBT ASK	DO NOT SCALE	ALL WELD TO BE BS EN 287-1:2011

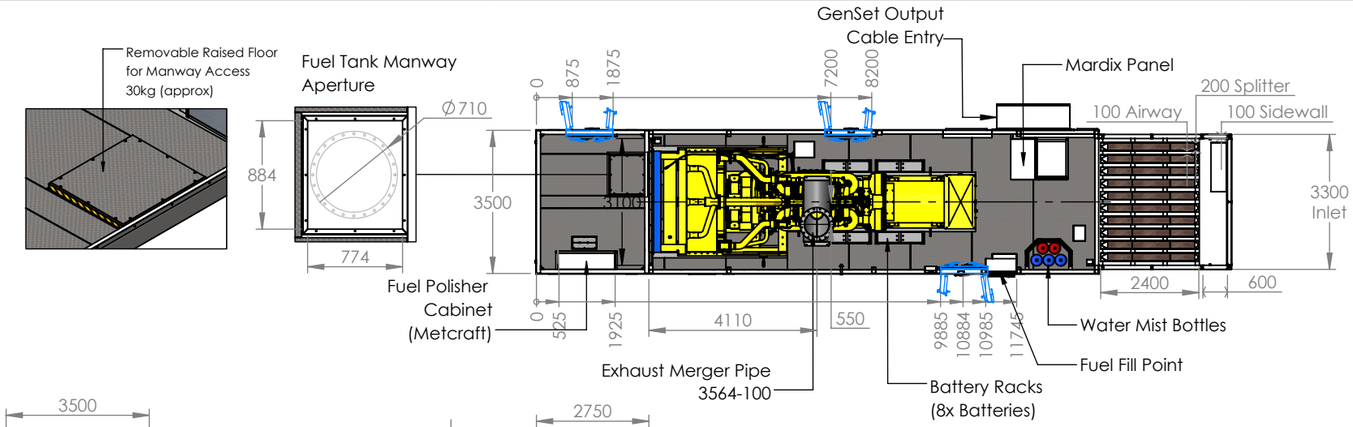

REVISIONS		
REV.	DESCRIPTION	DATE
A	INITIAL ISSUE.	03/03/2023
B	Revised to comments 07-03-2023	21/03/2023
C	Stack Height Revised	18/05/2023

Additional Drawings

SCR Frame: 3564-005
Weight and Lifting: 3564-010
Container Layout: 3564-021
Floor Plan: 3564-022
External GA: 3564-023

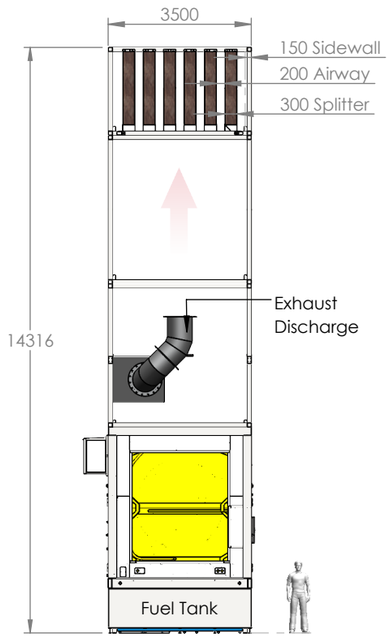

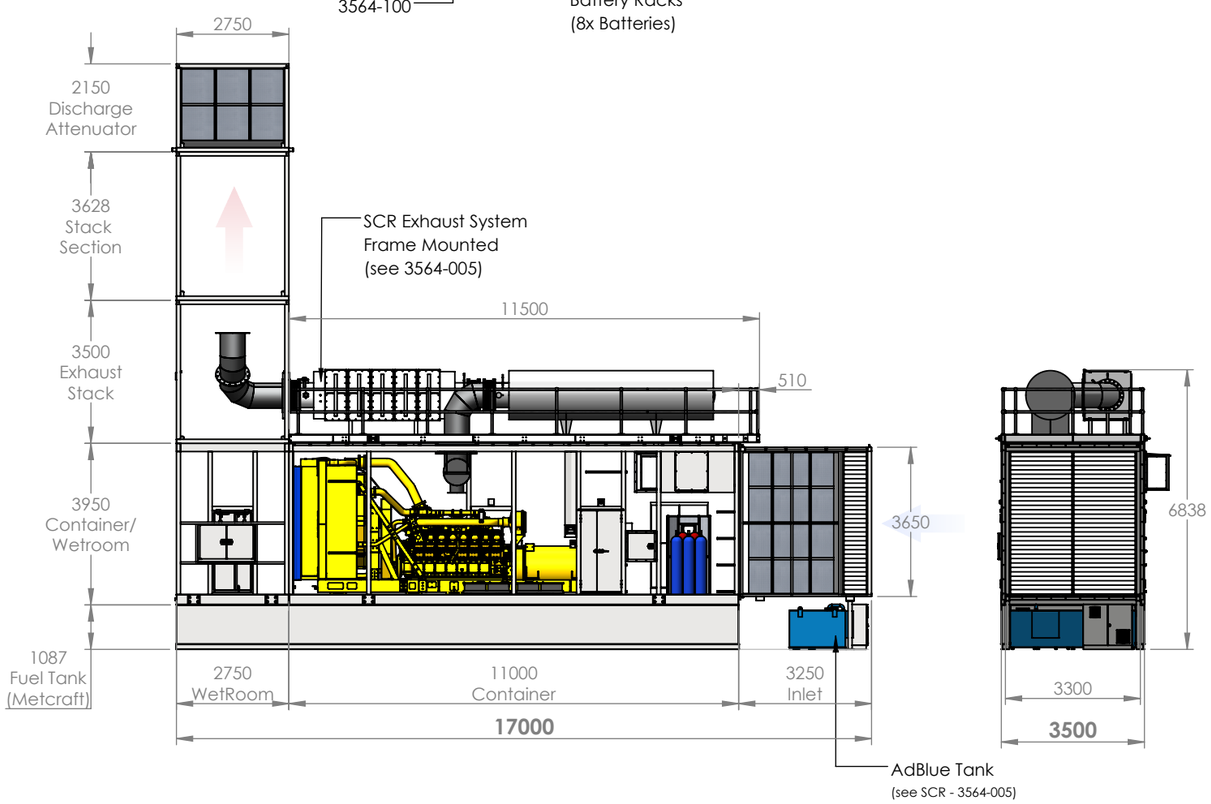

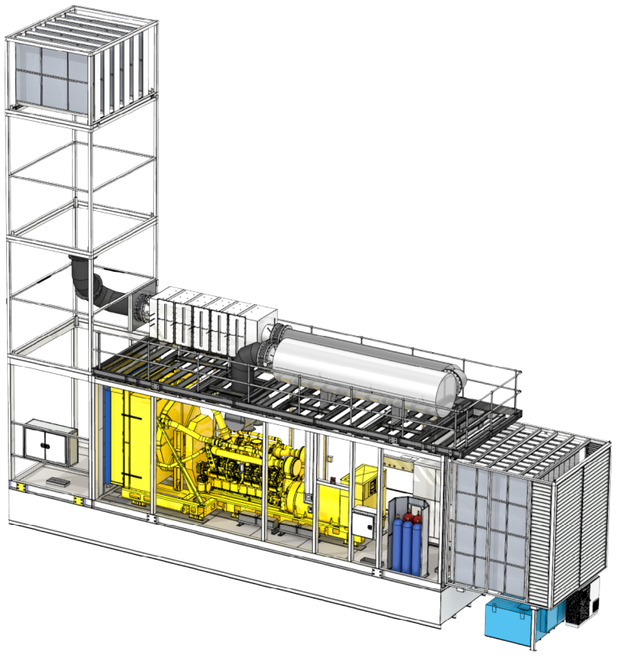

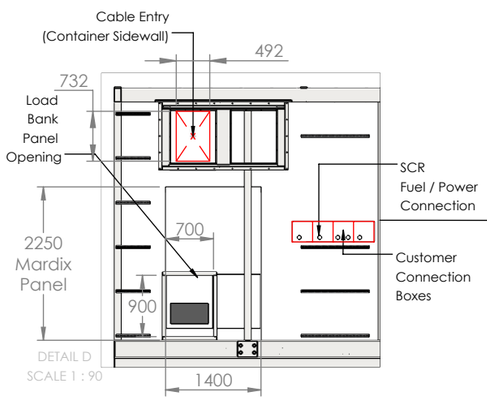

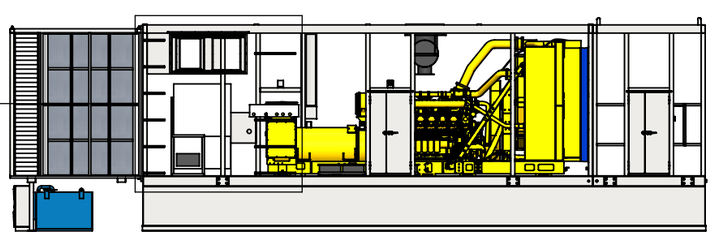

Project ID :	3564
Customer Ref :	LON 14
Quantity	8
GenSet Model	CAT 3516 E
Acoustic Criteria	75dBA @ 1m
Paint Grade	C3
Finish Colour (Ext)	00-A-05 (Goose Grey)
Finish Colour (Int)	White

LANDGUARD ENGINEERING LTD
UNIT 1, RIVERSIDE CLOSE
ICONFIELD PARK
HARWICH
ESSEX CO12 4EN

TEL: 01255 552 940
FAX: 01255 554 265
E-MAIL:
SALES@LANDGUARDENGINEERING.CO.UK

© 2023 **LANDGUARD ENGINEERING LTD ALL RIGHTS RESERVED**

LANDGUARD ENGINEERING LTD ALL RIGHTS RESERVED THIS DRAWING IS THE PROPERTY OF LANDGUARD ENGINEERING LTD AND IS LOANED SUBJECT TO THE CONDITIONS THAT IT IS NOT TO BE COPIED, REPRODUCED OR DISTRIBUTED EITHER IN WHOLE OR PART AND IS NOT TO BE USED DIRECTLY OR INDIRECTLY IN ANY WAY DETRIMENTAL TO THE COMPANY'S INTERESTS. ANY VARIATION WILL BE PROSECUTED ACCORDING TO THE LAW.

TITLE
General Arrangement

LON 14

FINNING CAT

JOB REF: 3564

DRAWN KM	SCALE 1:150 @ A3	DIMENSIONS MM	PROJECTION
CHECKED N/A	MATERIAL N/A	FINISH N/A	SHEET 1 OF 2
APPROVED N/A	DRAWING NUMBER: 3564-020		REVISION C
DATE 03/03/2023			

DRAWING LOCATION: S:\00 Landguard Engineering\00-Contracts\Finning\LON-B - Production\LON - B - Production Model\Lon14\

ALL MATERIALS TO BE GRADE S355 UNLESS NOTED OTHERWISE	GENERAL TOLERANCE +/- 1.0mm	IF IN DOUBT ASK	DO NOT SCALE	ALL WELD TO BE BS EN 287-1:2011

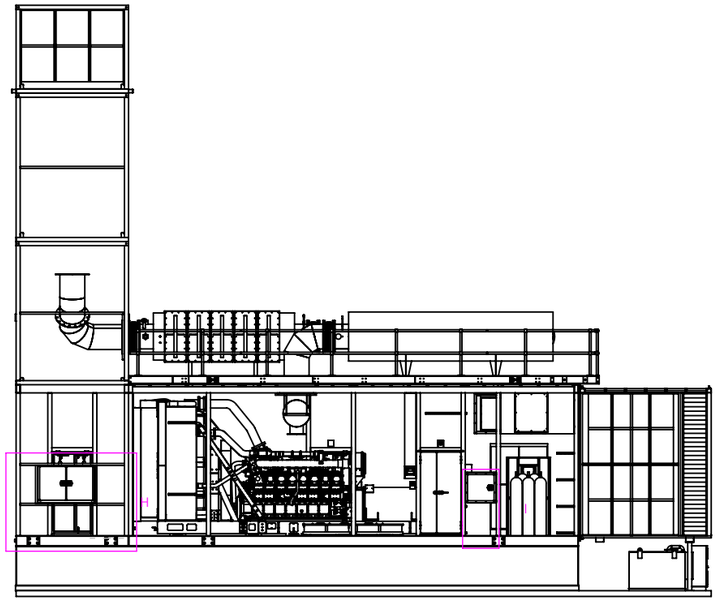

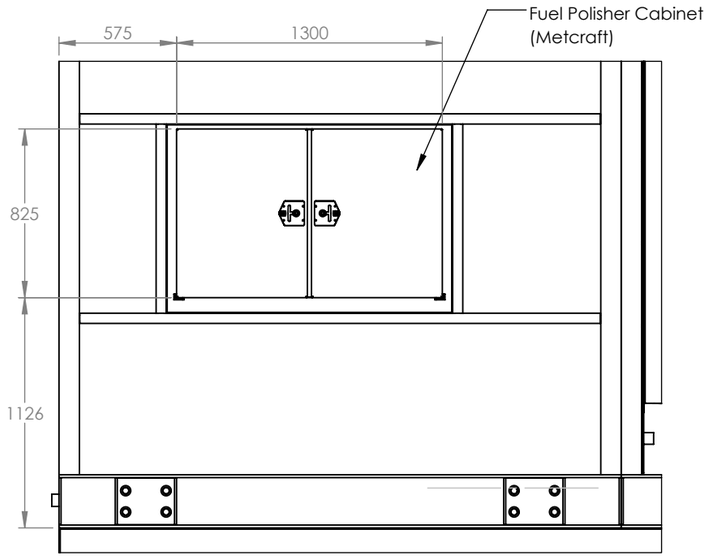

DETAIL H
SCALE 1 : 30

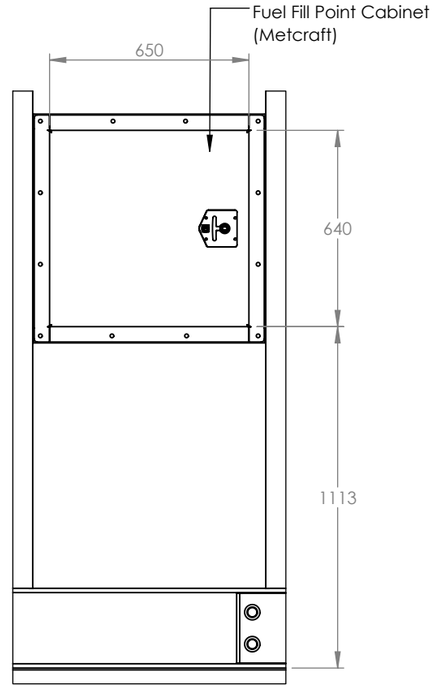

DETAIL I
SCALE 1 : 20

LANDGUARD ENGINEERING LTD
UNIT 1, RIVERSIDE CLOSE
ICONFIELD PARK
HARWICH
ESSEX CO12 4EN

TEL: 01255 552 940
FAX: 01255 554 265
E-MAIL:
SALES@LANDGUARDENGINEERING.CO.UK

© 2023 **LANDGUARD ENGINEERING LTD**
ALL RIGHTS RESERVED

LANDGUARD ENGINEERING LTD
ALL RIGHTS RESERVED
THIS DRAWING IS THE PROPERTY OF LANDGUARD ENGINEERING LTD AND IS LOANED SUBJECT TO THE CONDITIONS THAT IT IS NOT TO BE COPIED, REPRODUCED OR DISTRIBUTED EITHER IN WHOLE OR PART AND IS NOT TO BE USED DIRECTLY OR INDIRECTLY IN ANY WAY DETRIMENTAL TO THE COMPANY'S INTERESTS. ANY VARIATION WILL BE PROSECUTED ACCORDING TO THE LAW.

TITLE
General Arrangement

LON 14

FINNING CAT

JOB REF: 3564

DRAWN	CHECKED	APPROVED	DATE
KM	N/A	N/A	03/03/2023

SCALE	DIMENSIONS	PROJECTION
1:150 @ A3	MM	

MATERIAL	FINISH	SHEET
N/A	N/A	2 OF 2

DRAWING NUMBER: 3564-020

REVISION: C

DRAWING LOCATION: S:\00 Landguard Engineering\00-Contracts\Finning\LON-B - Production\LON - B - Production Model\Lon14\

ALL MATERIALS TO BE GRADE S355 UNLESS NOTED OTHERWISE	GENERAL TOLERANCE +/- 1.0mm	IF IN DOUBT ASK	DO NOT SCALE	ALL WELD TO BE BS EN 287-1:2011

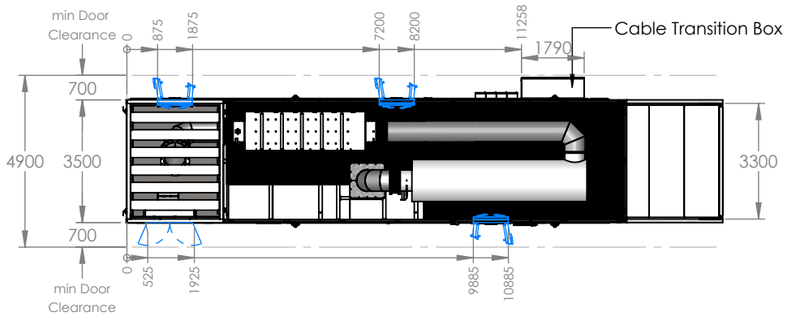

Project ID :	3564
Customer Ref :	LON 14
Quantity	8
GenSet Model	CAT 3516 E
Acoustic Criteria	75dBA @ 1m
Paint Grade	C3
Finish Colour (Ext)	00-A-05 (Goose Grey)
Finish Colour (Int)	White

REVISIONS		
REV.	DESCRIPTION	DATE
A	INITIAL ISSUE.	06/03/2023
B	Updated to comments 07-03-2023	22/03/2023
C	Stack Height Revised	18/05/2023

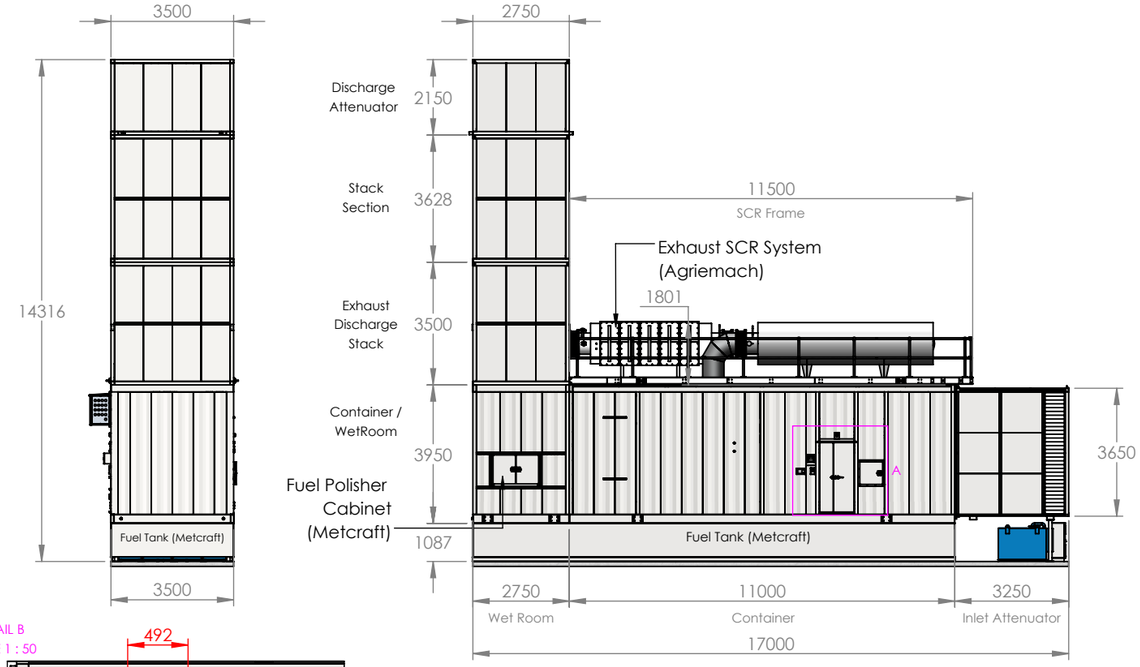

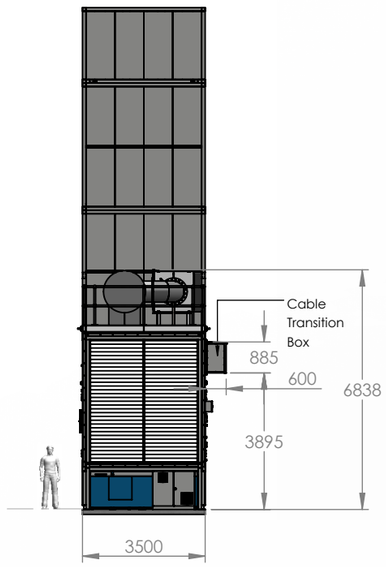

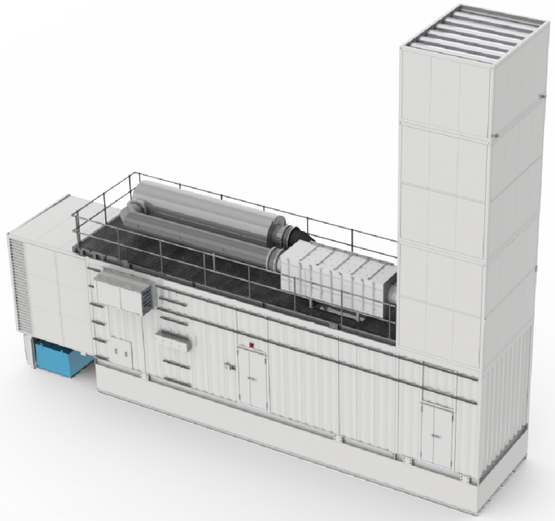

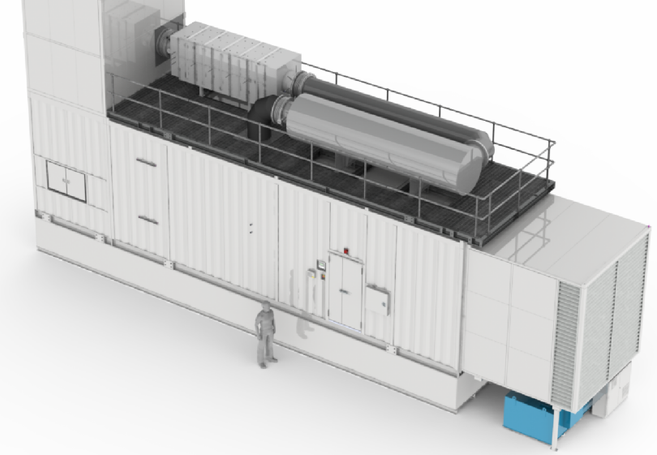

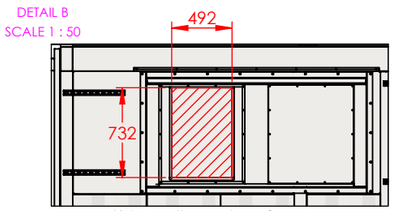

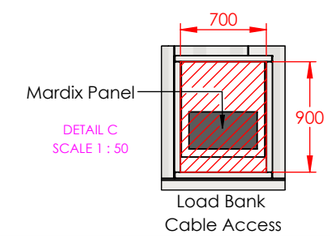

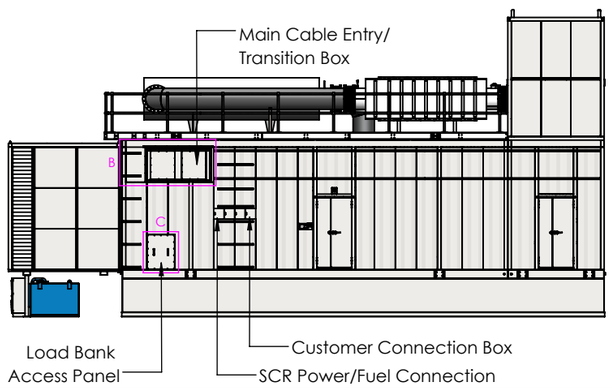

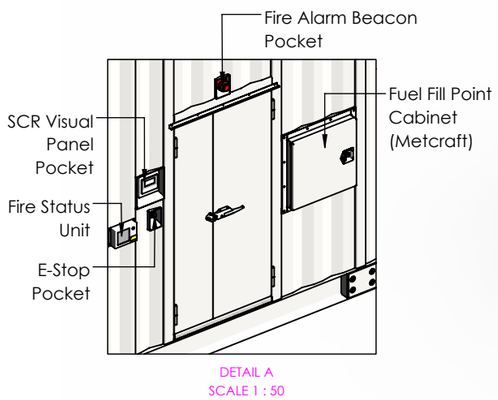

LANDGUARD ENGINEERING LTD
UNIT 1, RIVERSIDE CLOSE
ICONFIELD PARK
HARWICH
ESSEX CO12 4EN

TEL: 01255 552 940
FAX: 01255 554 265
E-MAIL:
SALES@LANDGUARDENGINEERING.CO.UK

C 2023 LANDGUARD ENGINEERING LTD ALL RIGHTS RESERVED

LANDGUARD ENGINEERING LTD ALL RIGHTS RESERVED THIS DRAWING IS THE PROPERTY OF LANDGUARD ENGINEERING LTD AND IS LOANED SUBJECT TO THE CONDITIONS THAT IT IS NOT TO BE COPIED, REPRODUCED OR DISTRIBUTED EITHER IN WHOLE OR PART AND IS NOT TO BE USED DIRECTLY OR INDIRECTLY IN ANY WAY DETRIMENTAL TO THE COMPANY'S INTERESTS. ANY VARIATION WILL BE PROSECUTED ACCORDING TO THE LAW.

TITLE: External Views

LON 14

FINNING CAT

JOB REF: 3564

DRAWN	CHECKED	APPROVED	DATE
KM	N/A	N/A	06/03/2023

SCALE	DIMENSIONS	PROJECTION
1:175 @ A3	MM	

MATERIAL	FINISH	SHEET
N/A	N/A	1 OF 1

DRAWING NUMBER: 3564-023

REVISION: C

DRAWING LOCATION: S:\00 Landguard Engineering\00-Contracts\Finning\LON-B - Production\LON - B - Production Model\Lon14\

ALL MATERIALS TO BE GRADE S355 UNLESS NOTED OTHERWISE	GENERAL TOLERANCE +/- 1.0mm	IF IN DOUBT ASK	DO NOT SCALE	ALL WELD TO BE BS EN 287-1:2011

REVISIONS		
REV.	DESCRIPTION	DATE
A	INITIAL ISSUE.	20/03/2023
B	SCR Frame load ring changed	24/03/2023
C	SCR Frame Weight added / Lifting Strop Brace now Bolt on	15/05/2023
D	Stack Section Height Revised	16/05/2023

Discharge Attenuator
2,024 kg

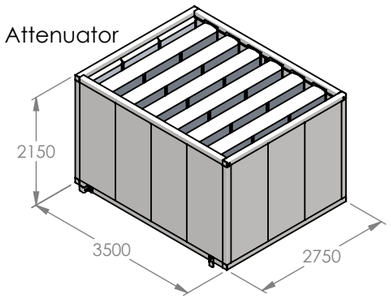

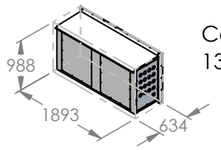

Cable Transition Box
137 kg

Stack Section
1,642 kg

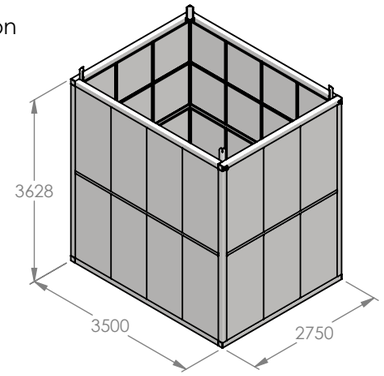

SCR Skid Frame
7,000 kg

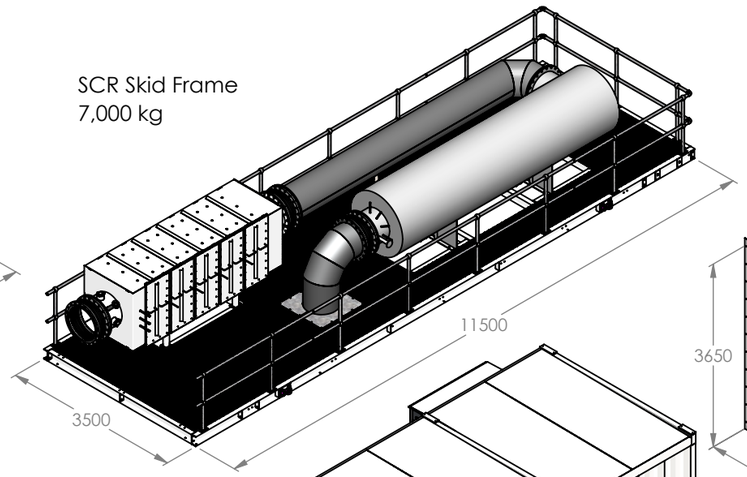

Inlet Attenuator
4,480 kg

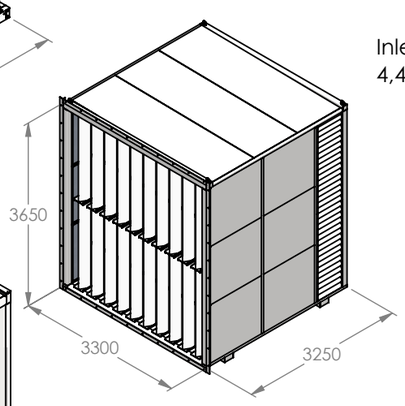

Exhaust Stack Section
2,805 kg

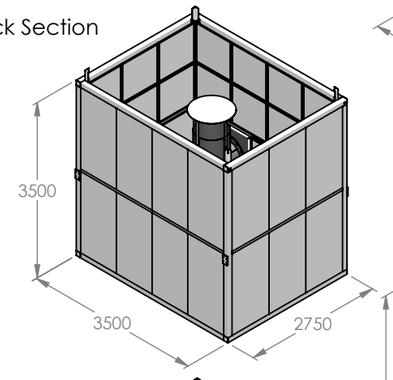

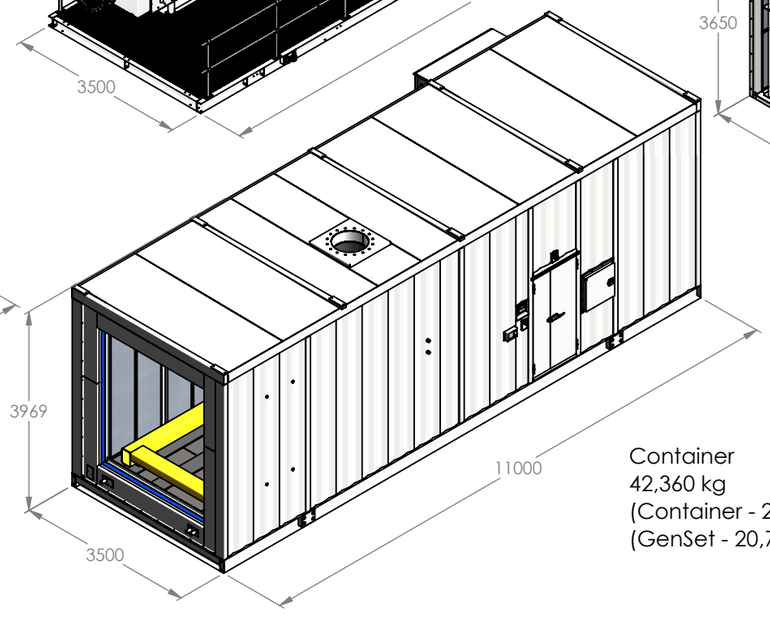

Container
42,360 kg
(Container - 21,653kg)
(GenSet - 20,707kg)

WetRoom
4,587 kg

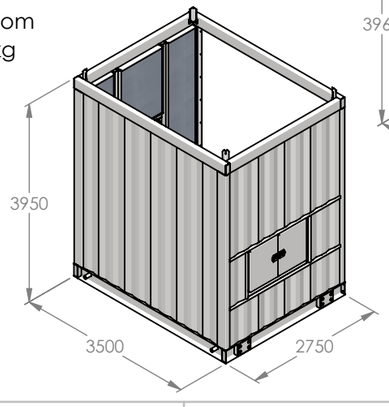

LANDGUARD ENGINEERING LTD
UNIT 1, RIVERSIDE CLOSE
ICONFIELD PARK
HARWICH
ESSEX CO12 4EN

TEL: 01255 552 940
FAX: 01255 554 265
E-MAIL:
SALES@LANDGUARDENGINEERING.CO.UK

© 2023 **LANDGUARD ENGINEERING LTD**
ALL RIGHTS RESERVED

LANDGUARD ENGINEERING LTD
ALL RIGHTS RESERVED
THIS DRAWING IS THE PROPERTY OF LANDGUARD ENGINEERING LTD AND IS LOANED SUBJECT TO THE CONDITIONS THAT IT IS NOT TO BE COPIED, REPRODUCED OR DISTRIBUTED EITHER IN WHOLE OR PART AND IS NOT TO BE USED DIRECTLY OR INDIRECTLY IN ANY WAY DETRIMENTAL TO THE COMPANY'S INTERESTS. ANY VARIATION WILL BE PROSECUTED ACCORDING TO THE LAW.

TITLE
Weight and Lifting

LON 14

FINNING CAT

JOB REF: 3564

DRAWN KM	SCALE 1:100 @ A3	DIMENSIONS MM	PROJECTION
CHECKED N/A	MATERIAL N/A	FINISH N/A	SHEET 1 OF 3
APPROVED N/A	DRAWING NUMBER: 3564-010		REVISION D
DATE 20/03/2023			

ALL MATERIALS TO BE GRADE S355 UNLESS NOTED OTHERWISE	GENERAL TOLERANCE +/- 1.0mm	IF IN DOUBT ASK	DO NOT SCALE	ALL WELD TO BE BS EN 287-1:2011

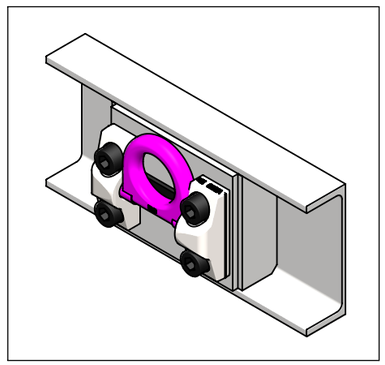

RUD VRBG 16t Load Ring

WetRoom

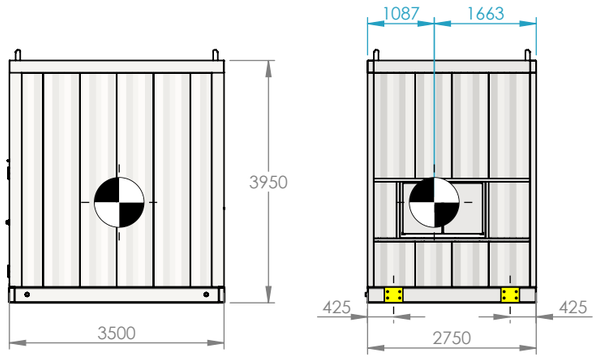

Container (with GenSet)

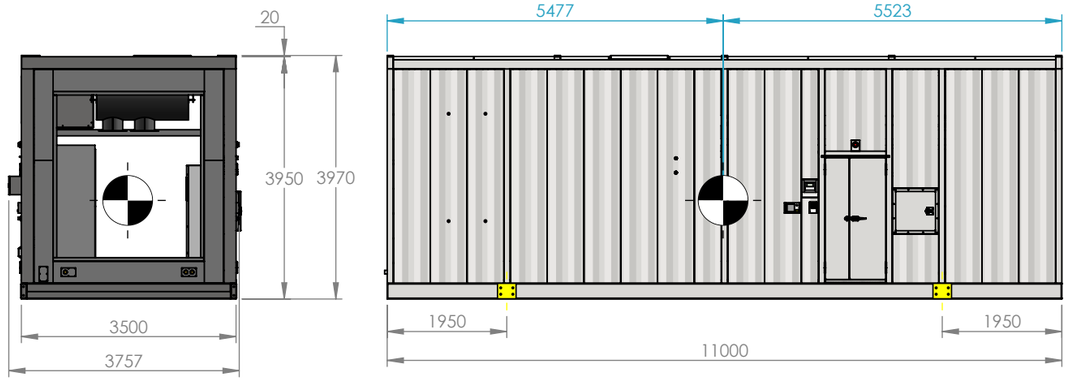

Inlet Attenuator

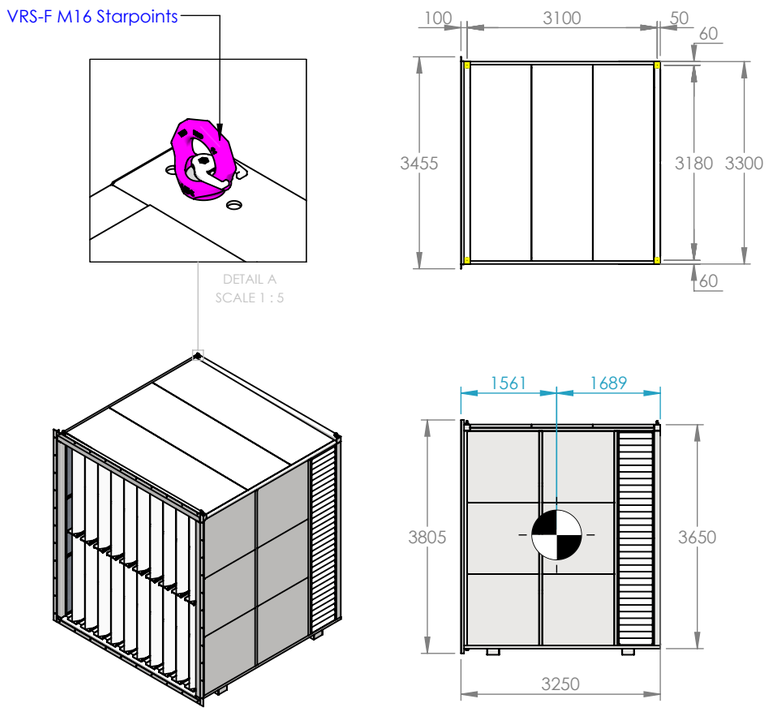

Stack Section

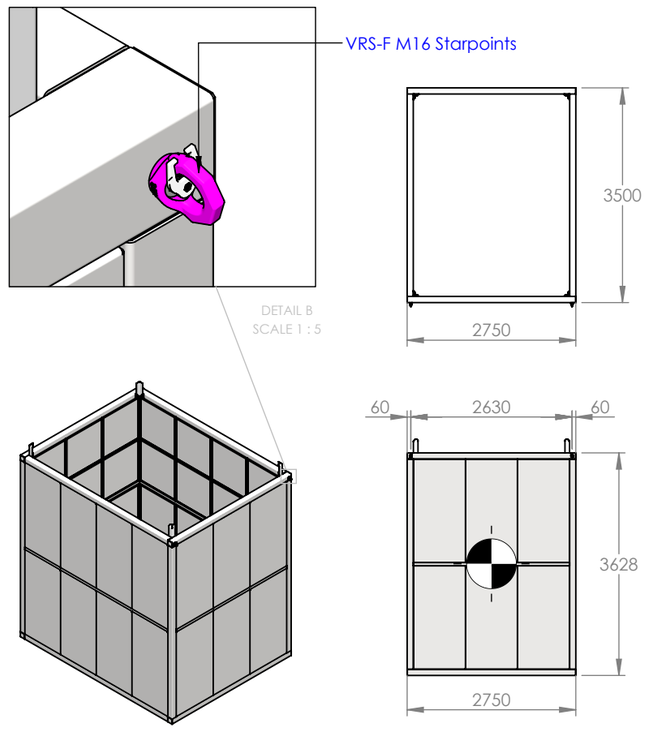

SCR Skid Frame

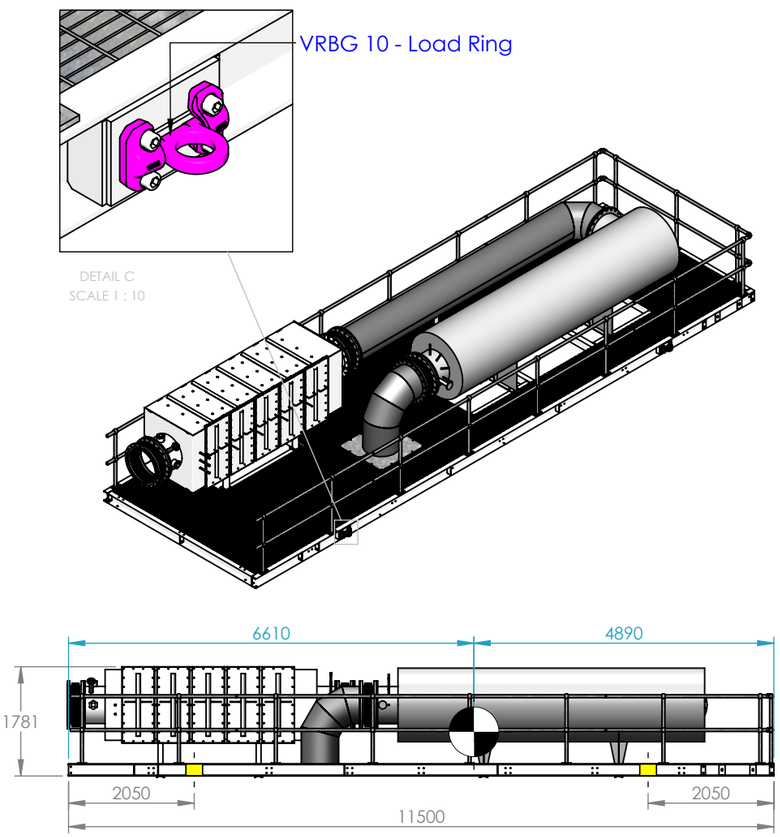

LANDGUARD ENGINEERING LTD
UNIT 1, RIVERSIDE CLOSE
ICONFIELD PARK
HARWICH
ESSEX CO12 4EN

TEL: 01255 552 940
FAX: 01255 554 265
E-MAIL:
SALES@LANDGUARDENGINEERING.CO.UK

© 2023 **LANDGUARD ENGINEERING LTD**
ALL RIGHTS RESERVED

LANDGUARD ENGINEERING LTD
ALL RIGHTS RESERVED
THIS DRAWING IS THE PROPERTY OF LANDGUARD ENGINEERING LTD AND IS LOANED SUBJECT TO THE CONDITIONS THAT IT IS NOT TO BE COPIED, REPRODUCED OR DISTRIBUTED EITHER IN WHOLE OR PART AND IS NOT TO BE USED DIRECTLY OR INDIRECTLY IN ANY WAY DETRIMENTAL TO THE COMPANY'S INTERESTS. ANY VARIATION WILL BE PROSECUTED ACCORDING TO THE LAW.

TITLE

Weight and Lifting

LON 14

FINNING CAT

JOB REF: 3564

DRAWN	CHECKED	APPROVED	DATE
KM	N/A	N/A	20/03/2023

SCALE	DIMENSIONS	PROJECTION
1:100 @ A3	MM	
MATERIAL	**FINISH**	**SHEET**
N/A	N/A	2 OF 3
DRAWING NUMBER:		**REVISION**
3564-010		D

ALL MATERIALS TO BE GRADE S355 UNLESS NOTED OTHERWISE	GENERAL TOLERANCE +/- 1.0mm	IF IN DOUBT ASK	DO NOT SCALE	ALL WELD TO BE BS EN 287-1:2011

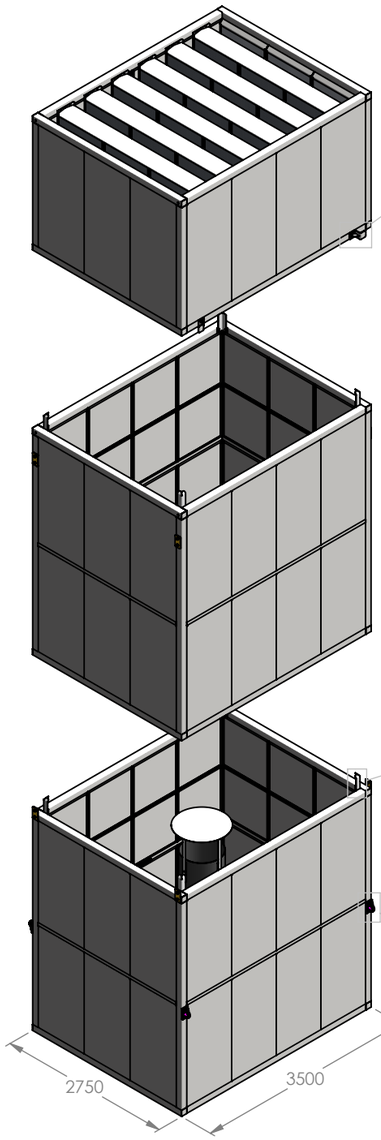

Lifting Strop Brace
Bolt on -
HexSet Screw - M10 x 25
A2 Stainless

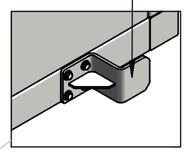

DETAIL D
SCALE 1 : 15

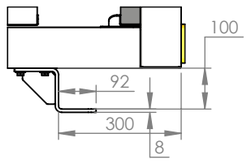

DETAIL G
SCALE 1 : 15

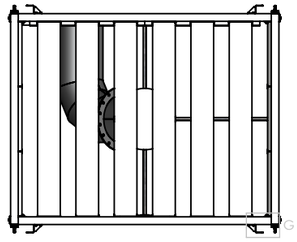

Hollobolt - M12
Galvanised

Stack Joining Plate
3564-156
12mm Mild Steel Plate

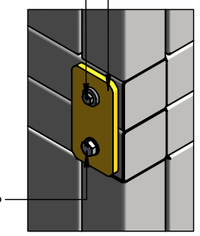

HexSet Screw - M16 x 50
8.8 BZP

DETAIL H
SCALE 1 : 10

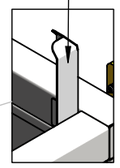

Stack Corner Guide
Bolt-on
HexSet Screw - M10 x 25
A2 Stainless

DETAIL E
SCALE 1 : 15

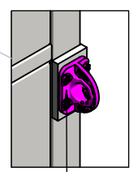

DETAIL F
SCALE 1 : 15

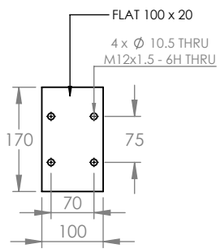

B-ABA 3.2t - M12

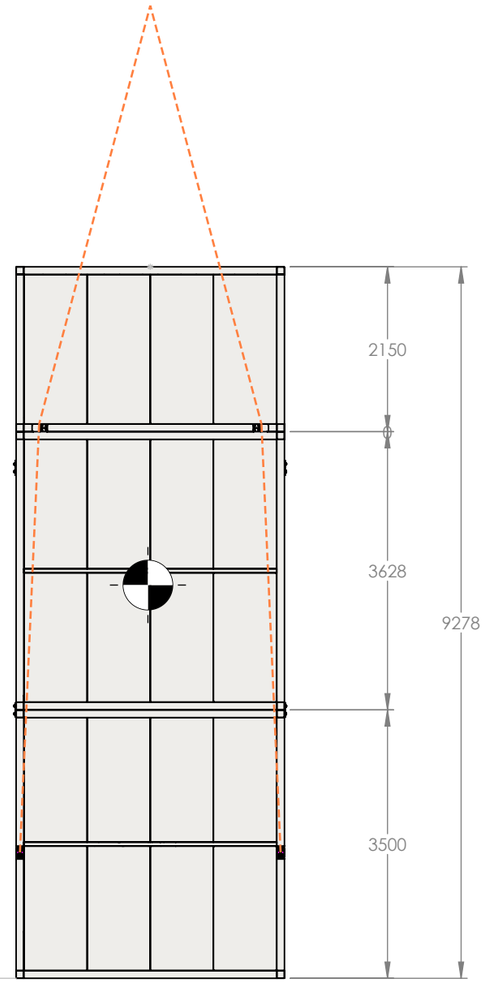

LON 14
5606 kg

LANDGUARD ENGINEERING LTD
UNIT 1, RIVERSIDE CLOSE
ICONFIELD PARK
HARWICH
ESSEX CO12 4EN

TEL: 01255 552 940
FAX: 01255 554 265
E-MAIL:
SALES@LANDGUARDENGINEERING.CO.UK

© 2023 **LANDGUARD ENGINEERING LTD**
ALL RIGHTS RESERVED

LANDGUARD ENGINEERING LTD
ALL RIGHTS RESERVED
THIS DRAWING IS THE PROPERTY OF LANDGUARD ENGINEERING LTD AND IS LOANED SUBJECT TO THE CONDITIONS THAT IT IS NOT TO BE COPIED, REPRODUCED OR DISTRIBUTED EITHER IN WHOLE OR PART AND IS NOT TO BE USED DIRECTLY OR INDIRECTLY IN ANY WAY DETRIMENTAL TO THE COMPANY'S INTERESTS. ANY VARIATION WILL BE PROSECUTED ACCORDING TO THE LAW.

TITLE
Weight and Lifting

LON 14

FINNING CAT

JOB REF: 3564

DRAWN KM	SCALE 1:80 @ A3	DIMENSIONS MM	PROJECTION
CHECKED N/A	MATERIAL N/A	FINISH N/A	SHEET 3 OF 3
APPROVED N/A	DRAWING NUMBER: 3564-010		REVISION D
DATE 20/03/2023			