NOTE:– ALL LAP JOINTS ARE 12.7mm (1/2") MINIMUM

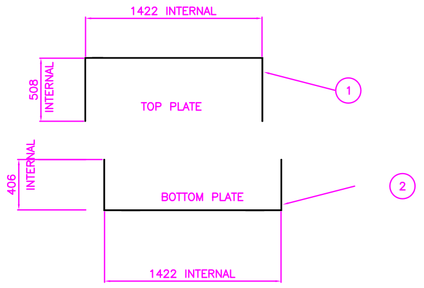

1	TOP PLATE – 1511mm L x 2438mm W x 5mm TH'K	2
2	BOTTOM PLATE – 1511mm L x 2235mm W x 5mm TH'K	2
3	END PLATE – 1422mm W x 889mm H x 5mm TH'K	2

DETAIL OF INNER TANK FOLDS & ENDS

DIMENSIONS ARE MINIMUM INSIDE TANK DIMENSIONS

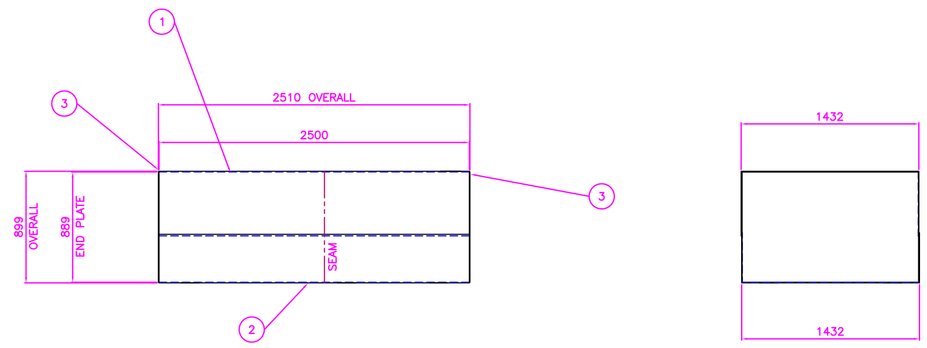

DEATIL OF PIPEWORK STUB HOLES

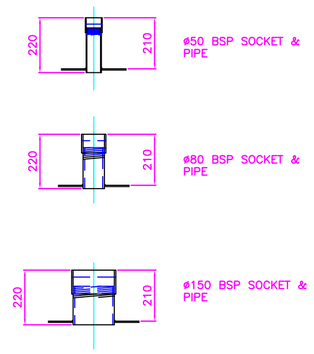

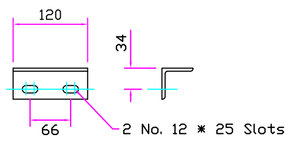

2 Solar Mast Brackets
from 50*50*5 RSA

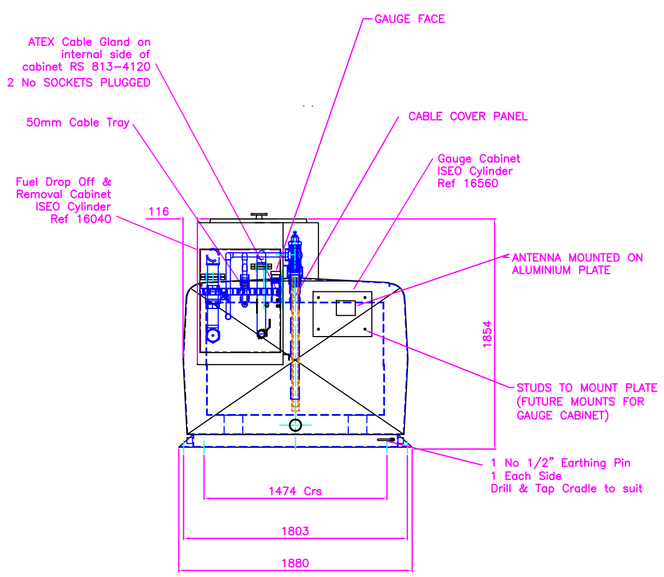

VIEW ON ARROW B

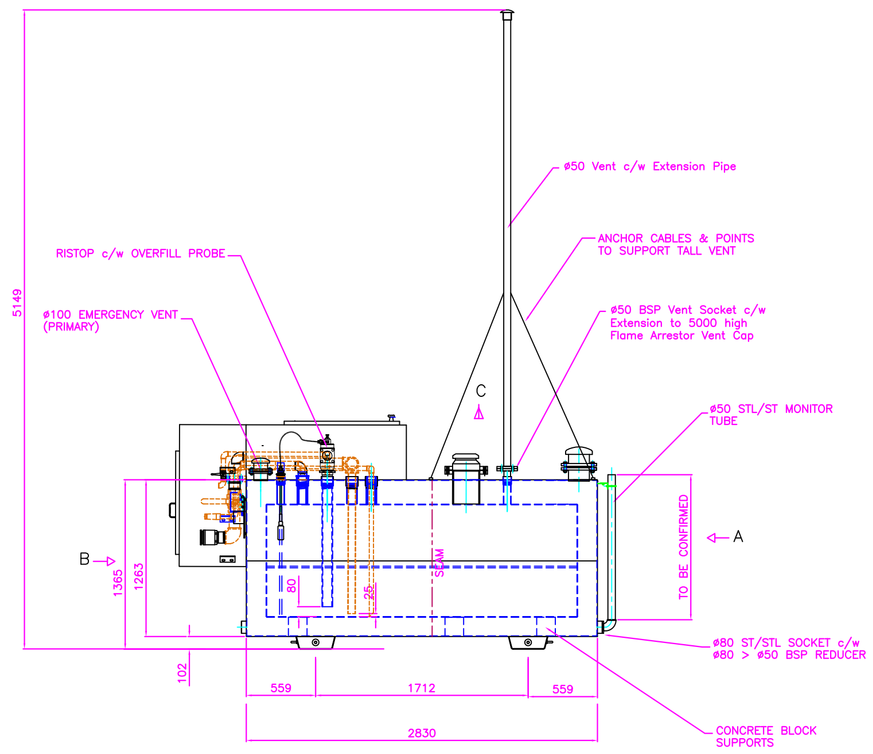

EXPLODED VIEW OF OUTER SHEET

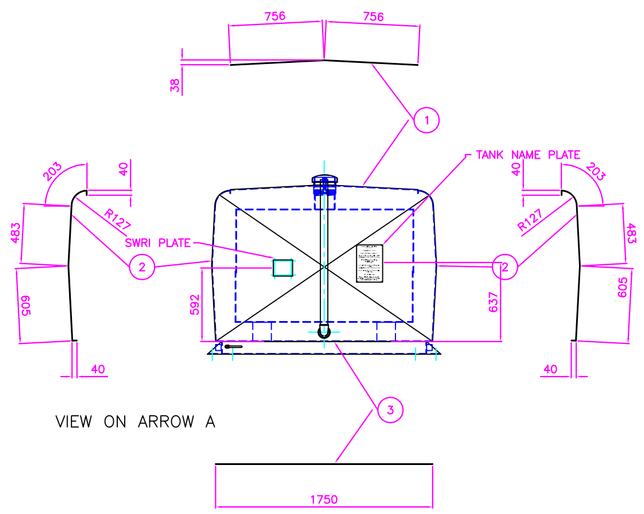

VIEW ON ARROW A

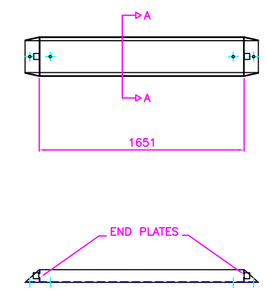

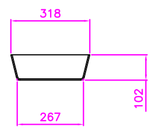

VIEW ON SECTION A–A
SCALE: 1:2

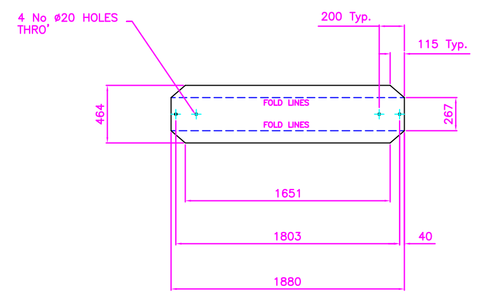

MATERIAL:– 5mm MS
QUANTITY:– 2 OFF AS DRAWN

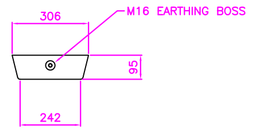

END PLATES (PROFILE TO SUIT)

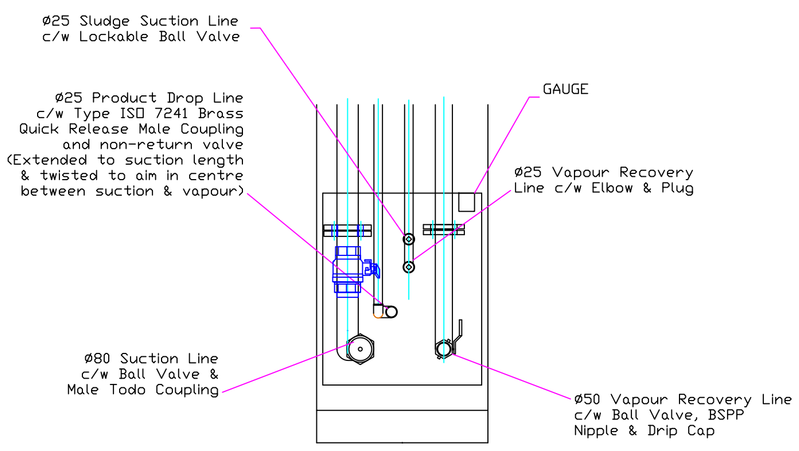

VIEW ON ARROW C

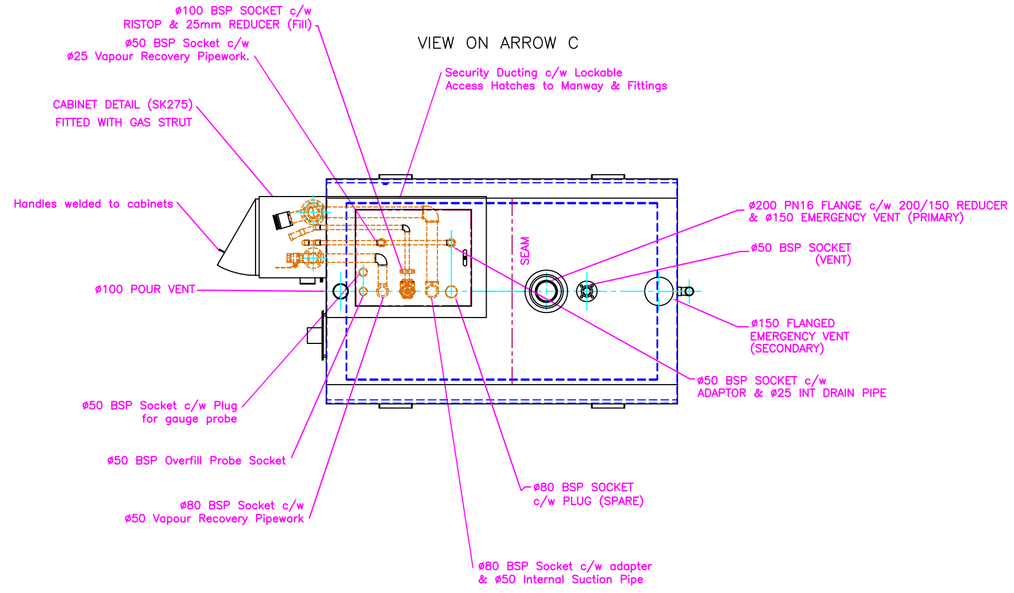

1a	TOP PLATE – 1830mm L x 1512mm W x 5mm TH'K	1
1b	TOP PLATE – 1525mm L x 1512mm W x 5mm TH'K	1
2a	SIDE PLATE – 1830mm L x 1371mm H x 5mm TH'K	2
2b	SIDE PLATE – 1525mm L x 1371mm H x 5mm TH'K	2
3	BOTTOM PLATE – 3353mm L x 1750mm W x 5mm TH'K	1
4	END PLATE – 1790mm W x 1245mm H x 5mm TH'K	2

NOTE: ALL DIMENSIONS ARE OUTSIDE DIMENSIONS

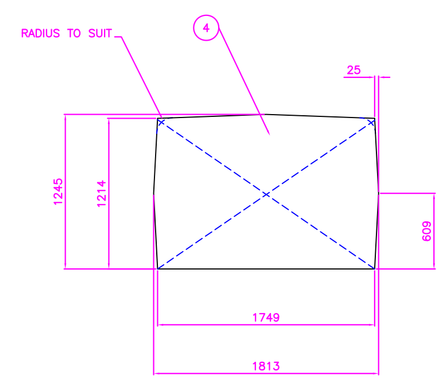

DETAIL OF END PLATES

Rev.	Date	Description	By
C	17/7	Cabinet removed	NP
B	16/7	Gauge Added & Antenna	NP
A	15/7	Fill Cabinets Added	NP

Drawing Title

GA OF MHRD–3000 LITRE SUPERVAULT
1.9m wide

Colour	BLUE		Shade	5017	
Drawn	N Powney	Date 10/7/15	Checked		Date
Customer			Drawing Number		Rev.
Refuels			C		C

All drawings remain the sole property of Ledbury Welding & Engineering , NO UNAUTHORISED COPIES are to be taken

Ledbury Welding & Engineering Ltd.
New Mills Industrial Estate,
Leadon Way,
Ledbury,
Herefordshire. HR8 2SR
Tel. : 01531 632222
Fax. : 01531 634718
Email technical@ledbury-welding.demon.co.uk

NOTES:

READ FITTING INSTRUCTIONS BEFORE FITTING ALL COMPONENTS.

USE DISIMILAR STAINLESS NUTS & BOLTS WITH ANTI SEIZE PASTE.

VENT BOLTS MUST BE TIGHTENED IN UNIFORM ORDER FOR CORRECT SEAL.

Probe Socket Detail

PAINT SPEC:-

SHOTBLAST TO SA 2.5

APPLY ONE COAT OF ZINC PHOSPHATE EPOXY PRIMER (HEMPADUR FAST DRY 17410 TO 150 UM DFT)

FOLLOWED BY ONE COAT OF EPOXY ACRYLIC GLOSS (HEMPEL PRO-ACRYLIC 5588 TO 50 UM DFT)