Reference: 13752275 Rev. 0
Submission Date: 03/09/202

tyco

Fire & Integrated Solutions

Project Chemcycle Newcastle

Modifications to Fire Protection & Detection Systems

Prepared by Tyco Integrated Fire & Security on behalf of

HARRIS PYE

A JOULON COMPANY

/ Prepared by /

/ Name /	/ Role /	/ Telephone /	/ Email /
Simon Greatorex	Fire Detection Proposals Engineer	+44 (0) 7976 449 010	simon.greatorex@jci.com
Albert Kozak	Water & Foam Fire Protection Systems Proposals Engineer	+44 121 203 1222	albert.kozak@jci.com

/ Departmental Contacts /

/ Name /	/ Role /	/ Telephone /	/ Email /
Mark Edwards	Senior Technical Sales Consultant	+44 7980 716 615	mark.edwards@jci.com
Michael Scragg	Head of Sales	+44 7980 716 456	michael.scragg@jci.com

/ Document Register /

/ Document /	/ Reference /
Tender Proposal	**13752275 - REV 0**
Tender Block Plan	**TBC**
Terms of Sale	**TFIS-TC-11 Rev 2**

/ Content of Proposal /

/ Section /	/ Description /
Section 1	**Fire Suppression Technical Specification**
Section 2	**Fire Alarm & Detection Technical Specification**
Section 3	**Gas Suppression Technical Specification**
Section 4	**Programme Of Works**
Section 5	**Commercial Proposal**
Appendix A	**Attendances**
Appendix B	**Client Responsibilities**
Appendix C	**Past Experience**

/ SECTION 1 – SPRINKLER TECHNICAL SPECIFICATION / 5
/ SECTION 2 – FIRE ALARM & DETECTION SPECIFICATION / 41
/ SECTION 3 – GAS SUPPRESSION TECHNICAL SPECIFICATION / 55
/ SECTION 4 – PROGRAMME OF WORKS / 61
/ SECTION 5 – COMMERICAL PROPOSAL / 63
/ APPENDIX A – ATTENDANCES / 68
/ APPENDIX B – CLIENT RESPONSIBILITIES / 71
/ APPENDIX C – PAST EXPERIENCE / 73

/ Tyco Fire Customer Value Proposition /

Tyco promises to provide a fire detection & suppression system which will minimise and manage the risk of fire to the plant, critically ensuring the reliable generation of energy to the community.

We are committed to working with Harris Pye and all stakeholders to ensure the safety of all employees during installation phase and understand our solutions will be critical in maintaining a safe environment once operational. Safety is the cornerstone of our culture with our employees and our customers.

We understand the importance of quality, and therefore our portfolio of products and services are tailored to meet the specific needs of the plant and the client enhancing our ability to deliver. Our advanced understanding of the technical requirements, diverse environment, and the sequencing of works allow us to work smartly and efficiently.

This positions our team to deliver with trust, collaboration and excellence using our experience to ensure the highest standards are maintained.

Tyco's after sales service structure will ensure that legislative requirements are met during the life cycle of the asset, providing peace of mind for the end user.

All of the above is underpinned by over 40 years of global experience delivering fire solutions into the Renewable Energy Market, on time, to cost and meeting our client's expectations.

/ SECTION 1 – SPRINKLER TECHNICAL SPECIFICATION /

1.1: Basis of proposal

This tender proposal has been based upon the following information received with the tender enquiry package:

CL8006877_PID--	28/02/2020 12:23	Adobe Acrobat D...	278 KB
CL8006877_PID_VALVE_SETS_1__2--	28/02/2020 12:23	Adobe Acrobat D...	133 KB
CL8006877_PID_VALVE_SETS_3__6--	28/02/2020 12:23	Adobe Acrobat D...	134 KB
CL8006877_PID_VALVE_SETS_4__5--	28/02/2020 12:23	Adobe Acrobat D...	121 KB
CL8006877-M21REVA--	28/02/2020 12:23	DWG File	350 KB
CL8006877-M22REVA--	28/02/2020 12:23	DWG File	1,218 KB
GB8007031-E-01_GROUND_FLOOR_FIRE_DETECTION_SYSTEM--(9...	28/02/2020 12:23	Adobe Acrobat D...	588 KB
M02_REVE_-_GENERAL_LAYOUT--	28/02/2020 12:23	DWG File	1,102 KB
M03_REVA--	28/02/2020 12:23	DWG File	918 KB
M03_REVD--	28/02/2020 12:23	DWG File	533 KB
M04_REVE--	28/02/2020 12:23	DWG File	356 KB
M05REVB--.bak	28/02/2020 12:23	BAK File	522 KB
M05REVB--	04/03/2020 10:08	DWG File	579 KB
M06REVB--.bak	28/02/2020 12:23	BAK File	569 KB
M06REVB--	04/03/2020 10:31	DWG File	648 KB
M07REVB--	28/02/2020 12:23	DWG File	945 KB
M08REVD--	28/02/2020 12:23	DWG File	591 KB
M09_REVD--	28/02/2020 12:23	DWG File	668 KB
M10REVA--	28/02/2020 12:23	DWG File	352 KB
M11REVA--	28/02/2020 12:23	DWG File	370 KB
M12REVA--	28/02/2020 12:23	DWG File	355 KB
M13_REVA--	28/02/2020 12:23	DWG File	344 KB
M14_REVA--	28/02/2020 12:23	DWG File	334 KB
M15REVA--	28/02/2020 12:23	DWG File	355 KB
M16REVB--	28/02/2020 12:23	DWG File	476 KB
M17REVB--	28/02/2020 12:23	DWG File	361 KB
M19_REVA--.bak	28/02/2020 12:23	BAK File	463 KB
M19_REVA--	04/03/2020 10:31	DWG File	529 KB
M20_REVB--	28/02/2020 12:23	DWG File	453 KB
QB8007031-E-01--(F99EE194-90CE-4520-9632-BE4DBCA94598)	28/02/2020 12:23	Adobe Acrobat D...	1,404 KB
QB8007031-E-02--	28/02/2020 12:23	Adobe Acrobat D...	780 KB
QB8007031-E-03--	28/02/2020 12:23	Adobe Acrobat D...	960 KB
QB8007031-E-04--	28/02/2020 12:23	Adobe Acrobat D...	643 KB
QB8007031-E-05--	28/02/2020 12:23	Adobe Acrobat D...	126 KB
QB8007031-E-06--(3D06D1AE-62C7-4762-A6B5-666DDD1CF6F7)	28/02/2020 12:23	Adobe Acrobat D...	76 KB
QB8007031-E-07--(30DAE304-66AA-4C5F-A4F4-3188F7C370BF)	28/02/2020 12:23	Adobe Acrobat D...	105 KB
QB8007031-E-08--(02C70D21-2D70-4D90-AFE5-32B2CAE5D302)	28/02/2020 12:23	Adobe Acrobat D...	102 KB
QB8007031-E-09--(16969602-5D3C-4935-9ACC-540EE58C315F)	28/02/2020 12:23	Adobe Acrobat D...	940 KB
QB8007031-E-10--	28/02/2020 12:23	Adobe Acrobat D...	149 KB
QB8007031-Z-01--	28/02/2020 12:23	Adobe Acrobat D...	363 KB
TYCO_PID_REV_A--	28/02/2020 12:23	DWG File	202 KB
Chemcycle Specification Rev2.1 (003) Clean	28/02/2020 12:09	Microsoft Word D...	559 KB
HPM-18782-PS-PL-001_A1 (SHEET 01 OF 02)	28/02/2020 12:09	Adobe Acrobat D...	1,498 KB
revised HPM-18782-PS-PL-001_A1 (SHEET 01 OF 02) (002)	28/02/2020 09:09	Adobe Acrobat D...	1,543 KB

1.2: Design Basis

Our designs have been based upon the information contained within the enquiry documents as listed in Section 1 of our tender.

Detailed designs would be prepared using our in-house Computer Aided Design Facilities and shall be in accordance with the following:-

/ Standards /
// NFPA® 13 Standard for the Installation of Sprinkler Systems
// NFPA® 15 Standard for Water Spray Fixed Systems for Fire Protection
// NFPA® 20 Standard for the Installation of Stationary Pumps for Fire Protection
// NFPA® 850 Electric Generating Plants and High Voltage Direct Current Converter Stations
// Chubb Energy from Waste Insurers Fire System Requirements.

Preliminary design drawings would be submitted to the client and/or their approving authority for comment or formal approval, prior to commencing work. Design drawings would be based upon information provided by the client and we have not included for carrying out any detailed site surveys at this stage.

1.3: Summary of Protected Areas

(A) Manifold #1 Located Between Grids 33-34
// Dry Pipe Sprinkler System to Proposed Extension Hall Roof - 10.2mm over the most remote 279m2 (+30% increase for Dry Pipe System)
// Electrically Actuated Deluge System to Oversized 10tph Shredder (8.1mm/min)
// Electrically Actuated Deluge to Conveyor (From Oversized Shredder to Autoclave) 10.2l/min over Protected Surface

(B) Manifold #2 Located Between Grids 27-28
// Electrically Actuated Deluge System to Medical Grade Shredders #1 (10.2mm/min) 5No Shredders Covered by one Control Valve
// Electrically Actuated Deluge System to Medical Grade Shredders #2 (10.2mm/min) 5No Shredders Covered by one Control Valve
// Electrically Actuated Deluge to Medical Grade Shredders to Autoclave Conveyor (10.2mm/min over Protected Surface)
// Electrically Actuated Deluge to Autoclave Output Conveyor Autoclave Output (10.2mm/min over Protected Surface)
// Dry Pipe Sprinkler System to Empty Bin Storage Area 10.2l/min over 279m2 (+30% increase for Dry Pipe System)
// Electrically Actuated Deluge to Conveyor Zone #1(From Autoclave to Storage) (10.2mm/min over Protected Surface)

(C) Manifold #3 Located Between Grids 14-15

//	Waste Storage Bunker - Self Oscillating Remote control Water Monitors - On/off Manual / Auto actuation (2 monitors)
//	Electrically Actuated Deluge System to Processed Waste Dryer (8.1mm/min over Protected Surface) (10.2mm/min)
//	Electrically Actuated Deluge System to Metal Separator (8.1mm/min over Protected Surface)
//	Electrically Actuated Deluge to Conveyor Zone #2(From Autoclave to Storage) (10.2mm/min over Protected Surface)
//	Electrically Actuated Deluge to Advanced Pyrolysis Conveyor (10.2mm/min over Protected Surface)
//	Electrically Actuated Deluge to Export Conveyor (10.2mm/min over Protected Surface)

1.4: SCOPE OF SUPPLY FOR SPRINKLER SYSTEMS

1.4.1: FIRE PUMPS

The Fire Fighting water supply would comprise of 1 x 100% Capacity Electric Driven Duty fire pump, 1 x 100% Capacity Diesel Standby fire pump & 1 x 100% Electric Motor Driven Jockey pump complying with the requirements in accordance with NFPA 20 Rules, 2013 listed and approved by Factory Mutual (FM) and/or Underwriters Laboratories (UL).

The fire pump installation would be complete with all necessary valves, instrumentation and pressure switches to facilitate automatic starting on loss of pressure in any fire system and would include test facilities to allow the fire pump pressure and flow to be periodically checked and verified on a continued basis.

The required duty falls within the NFPA20 90% to 140% allowable range of rated capacity:-

/ Designation /	/ Description /
Type of System	Fire Pump System
Mode of Operation	Automatic/Manual
Design Standard	NFPA 20 Rules, 2013 listed and approved by Factory Mutual (FM) and/or Underwriters Laboratories (UL)
Design Capacity	10,215L/min at 9.5 bar
Rated Duty	2,500 US/GPM at 9.5 Bar
Suction Condition	Flooded
Location	Safe Area Pump House building

Qty 1 100% Electric Duty Fire Pump

// 1 off Thrustream TD20D split case type pump, listed & approved, with 250mm suction and 200mm discharge branches coupled to a 200 kW IE1 UL Listed, totally enclosed fan cooled motor. Set is complete with a 200 kW Floor Mounting Star Delta listed Starter.

Qty 1 100% Diesel Standby Fire Pump

// 1 off Thrustream TD20D split case type pump, listed & approved, with 250mm suction and 200mm discharge branches coupled to a multi-cylinder heat exchanger cooled listed Clarke JU6H-UF84 diesel engine developing 204kW at 2960rpm. Set is complete with a baseplate mounted listed diesel engine controller and Lead Acid batteries.

Qty 1 Electric Jockey Pump & Starter

// 1 off 1SV22T Jockey Pump, vertical multistage type, with 25 mm suction and discharge branches, close coupled to a 1.1kW totally enclosed fan cooled motor. Set complete with 1.1kW wall mounting, none listed, Non NFPA20, Direct on Line, Starter.

Fire Pump House Sprinkler System

// The Pump room will be fitted with a Wet Pipe Sprinkler System. This system will be fed directly from the fire water distribution pipework downstream of the firefighting pumps. A flow alarm switch will be provided which, upon activation, will send a `system operated` alarm signal to the site wide fire alarm system.

Power Supply:

// Electric Set 415v / 3ph / 50Hz - 4 wire
// Diesel Set 240v / 1ph / 50Hz - 2 wire
// Jockey set 415v / 3ph / 50Hz - 4 wire

Electrical Data:
Typical data for this motor size and power supply is

// Full Load Current 336 Amps
// Locked Rotor Current 2520 Amps
// Minimum Burn-out Time 5 Seconds

1.4.2: Fire Pump house (Typical Specification)

We include for the supply and installation of a GRP Pumphouse to the following specification:-

- // The walls will be constructed from 18mm exterior grade plywood on a 75mm perimeter frame, fully encapsulated with class 1 fire resistant resin reinforced with 450g matting.
- // The roof will be constructed from 9mm exterior grade plywood at a 5-degree pitch encapsulated as per the walls.
- // The exterior will be semi-gloss textured finish in any RAL or BS colour of the clients choice.
- // The structure will provide a 60-minute class 1 fire resistance (retention of stability, integrity and insulation) Which will be manufactured but not certified to BS 476 parts 7 and 22. Providing self-extinguishing laminates (surface spread of flame).
- // The structure will afford a U value of not more than 1.5 W/m2C degrees.
- // The doors will be 1 no double 1800w X 2100 high, secured by Yale type night latch lock, high and low level shot bolts and will include 90 degree stabilisers.
- // To include 2 x Auto louvers 600mm x 600mm, 450mm auto fan.
- // Electrics including distribution board, 5 x strip lights and 2 x heaters.
- // Size 12500mm (External) x 6500mm (External) x 3600mm minimum internal height.
- // Fire Pump House to be constructed and to be maintained to a minimum ambient temperature of +10ºC

1.4.3:Water Supply Infrastructure Summary

Basis for Equipment Selection: As per NFPA 850 Section 6.2 Water Supplies & CHUBB Waste Processing Plant Insurers Fire System Guides. The water supply for the permanent fire protection installation should be based on providing a 2-hour supply for all of the following:

1- Either of the following, whichever is greater:
   (a) The largest fixed fire suppression system demand
   (b) Any fixed fire suppression system demands that could reasonably be expected to operate simultaneously during a single event [e.g., turbine underfloor protection in conjunction with other fire protection system(s) in the turbine area, coal conveyor protection in conjunction with protection for related coal handling structures during a conveyor fire, adjacent transformers not adequately separated according to 5.1.4
2- The hose stream demand of not less than (379 L/min)
3- Incidental water usage for non–fire protection purposes

We have included for all necessary Suction, Discharge and Pump Test pipe work, valves, and instrumentation. Our offer is compliant with NFPA 20.
The Water Tank infill pipework rising from grade up the side of the tank is included and is to terminate within 1metre of the water infill connection flange on the tank.
We have included for all necessary cabling within the Fire Pump House for controls and power however we have not included for the incoming Power Supplies to the Fire Pumps or any associated Panels.
The fire pump duty is based on our preliminary calculations for a reasonable Maximum Hydraulic Demand Scenario. The maximum demand scenario must be set by the Authority having jurisdiction, therefore the following is subject to change:-

Area	Area of Operation (m2)	Density lt/min/m2	Theoretical Flow Rate (l/min)	Hydraulic Gradiant (%)	Total Flow (l/min)	Duration of Operation (Min)	Total Water Capacity (L)	Notes
Existing Roof Suppression System	325	12.5	4063	1.2	4875	120	585000	
Bunker Fire Water Canon 2No			1892	1	1892	120	227040	Note - no hydraulic gradient with Canons.
Dryer Deluge System (6 x 52.44L)			315	1.2	378	120	45308	6 Nozzles @ 52.44l/min Each
Metal Seperator Deluge System (6 x 52.44L)			315	1.2	378	120	45308	6 Nozzles @ 52.44l/min Each
Conveyor Deluge (Zone #1 and #2) 110m Top + 110m Return Belt	220	10.2	2244	1.2	2693	120	323136	
						Fire Pump Flow Rate	**10215**	**Litres/Min**
						Total Capacity Required	**1225792**	**Litres**

1.4.4:Water Storage Tank

We have included for an FM Approved water storage tank to provide 120 minutes of water in line with the maximum demand scenario.

Tank Design Standard	: FM Approved.
Effective Capacity	: 1250m3
Type of Tank	: Cylindrical
Dimensions	: Ø14m x 12m High x 1 tanks
Coating	: Galvanised to BS EN 10346, un-painted.
Ground Loading	: 111Kn/m2

1.4.5: External Underground Water Supply main Extension

DISTRIBUTION MAIN – UNDERGROUND PIPE	
Combined Hydrant Main and Tank Infill main Diameter	DN200 (225mm OD)
Fire Hydrant Main Material	HDPE SDR 17
Water Source	Fire Water Pumps
Tie in Point	As per Block Plan

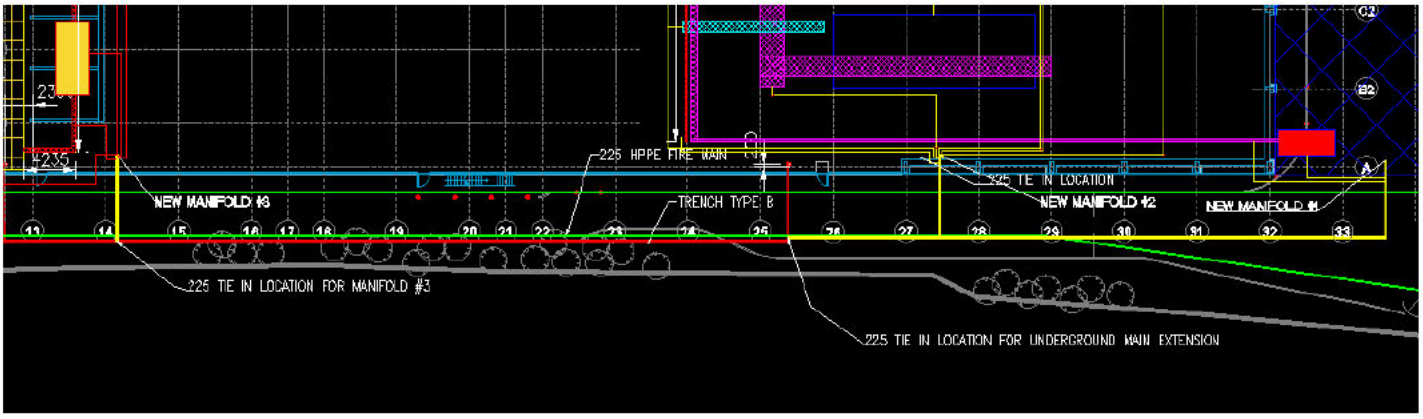

Typical Pipe Trench Detail (By Others)

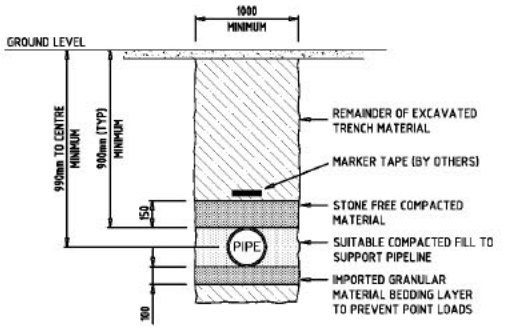

Buried mains are to be laid in trenches on a level bed of fine sand or pea gravel having a minimum depth of 100mm. Trenches would need to be excavated to a sufficient depth to provide a minimum ground cover of 900mm measured from the top of the pipe, to prevent water in the mains from freezing. Sand or pea gravel would also be required, compacted up to a level of 150mm above the top of the pipe, before backfilling trench with excavated soil, free of any large stones.

No allowance in materials has been made for setting around obstacles which may be discovered during excavation of trenches and any resulting additional pipework and fittings would be required to be provided as an extra to contract.

This quotation includes does not include the civil engineering, setting out and excavation works associated with the laying of the underground pipework. Whilst the pipework supplier's laying specification would have to be strictly adhered to, we would not accept any responsibility for damage arising out of ground subsidence or for damage due to transmitted heavy loads from overhead traffic for which we were never made aware.

Note: Please note Tyco would require at least 60m of trench to be made available every day, all excavation & backfill to be provided by the Civils contractor.

Connections
Pipes and fittings will be joined by BUTT Fusion Fittings.

Anchorage
One of the fundamental features of a fully integrated fusion welded polyethylene pipe system, is that it is end load resistant. Anchorage is not normally required at the junctions, bends and end connections provided that all associated fittings are themselves fully end load bearing. Fusion welded joints will provide the necessary degree of end load resistance and where mechanical fittings are used, then these should be Type 1 (WIS 4-24-01).

Contaminated Ground
Our offer is based on providing the following:-
Protecta-Line is an award winning fully integrated barrier pipe and fittings system for safely transporting water through contaminated land. With WRAS and Regulation 31/27 approvals, the system provides total peace of mind to the highest industry standards including the new WIS 4-32-19, meeting all the safety legislation demanded by water companies and customers alike. Protecta-Line combines all of the advantages of conventional high quality PE pipe with an aluminium barrier layer to prevent permeation of ground contaminants and an additional PE outer protection layer. The Protecta-Line system is currently offered in pipe diameters from 25mm through to 355mm and incorporates a dedicated range of approved fittings.

Maximum continuous operating pressures at 20ºC, offered pipe would be PE100 SDR17.

PIPE OD * PIPES SPECIFICALLY SIZED FOR INSERTION LINING APPLICATIONS	SDR11				SDR17.6 (GAS) / SDR17 (WATER)		SDR17
	PE80		Excel (PE100)		PE80		Excel (PE100)
	GAS	WATER	GAS	WATER	GAS	WATER	WATER
20mm	5.5	12.5					
25mm	5.5	12.5					
32mm	5.5	12.5					
50mm	5.5	12.5					
63mm	5.5	12.5	7.0	16.0	3.0	8.0	
90mm	5.5	12.5	7.0	16.0	3.0	8.0	10.0
110mm		12.5		16.0	3.0	8.0	10.0
125mm	5.1	12.5	7.0	16.0	3.0	8.0	10.0
160mm	5.1	12.5		16.0	3.0	8.0	10.0
180mm	4.1	12.5	7.0	16.0	3.0	8.0	10.0
213mm*							
225mm		12.5		16.0		8.0	10.0
250mm	4.0	12.5	7.0	16.0	3.0	8.0	10.0
268mm*							
280mm		12.5		16.0		8.0	10.0
315mm	3.4	12.5	7.0	16.0	2.7	8.0	10.0
355mm	3.1	12.5	7.0	16.0	2.5	8.0	10.0
400mm		12.5	7.0	16.0	2.3	8.0	10.0
450mm		12.5	7.0	16.0	2.2	8.0	10.0
469mm*							
500mm		12.5	7.0	16.0	2.1	8.0	10.0
560mm			7.0	16.0	2.0		10.0
630mm			7.0	16.0	1.8		10.0
710mm				16.0			10.0
800mm							10.0
900mm							10.0
1000mm							10.0
1200mm							10.0

1.5: SYSTEM MANIFOLDS

1.5.1: System Manifold scope of supply

We include for the supply of a sprinkler manifolds located in various areas listed below:

Manifolds
// New Manifold #1 Located between Grid 33/34 (Connection for 3no Control Valves)
// New Manifold #2 Located between Grid 27/28 (Connection for 6no Control Valves)
// New Manifold #3 Located between Grid 14/15 (Connection for 6no Control Valves)

The sprinkler manifolds will be sized DN200/DN150 and complete with the following:-

- // Manifold isolation valve
- // All associated drain piping including isolation valves, piped within 1 metre of the manifold.
- // Alarm gong and airline piping for connecting to the site wide compressed air supply,
- // Drain & airline piping in Galvanised finish.
- // Manifold piping supplied in red oxide paint finish
- // Manifold fully supported off the floor at approximately 600mm AFFL.
- // Please see typical manifold detail below, figure 1.1.

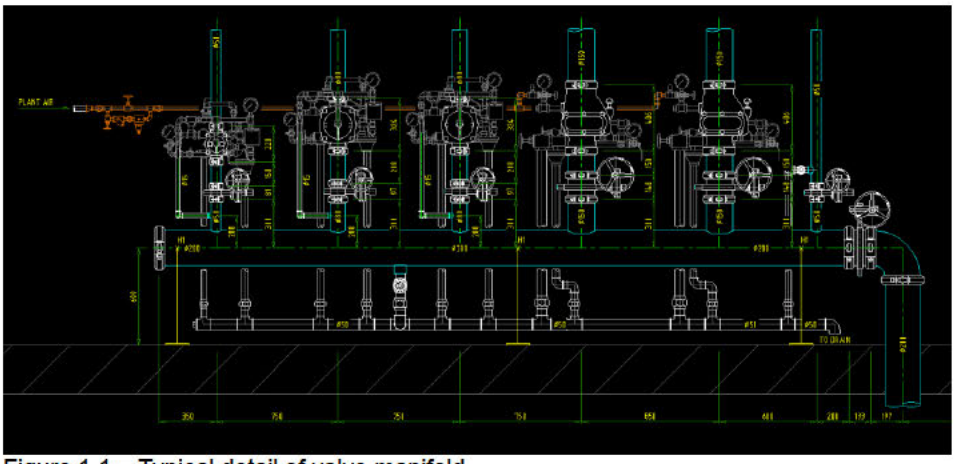

Figure 1.1 – Typical detail of valve manifold

1.5.2: Locations of Proposed Sprinkler Manifold:-

Sprinkler manifolds will be located around the plant in easy accessible locations for the Fire Fighting Authority. The manifolds will serve multiple local firefighting systems, please see below proposed manifold locations.

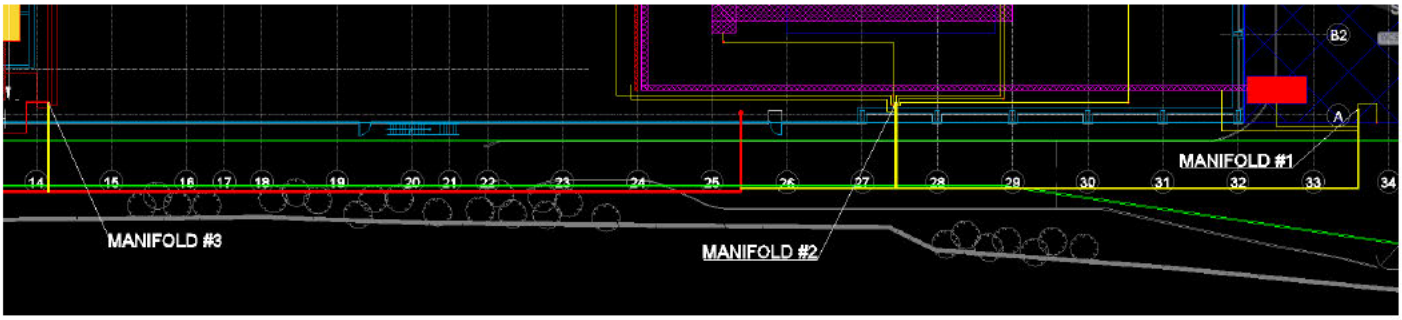

1.6: FUEL RECEIVING HALL

1.6.1: Fuel Receiving Hall Extension Roof Sprinklers

Sprinkler Protection has been included to the Fuel Receiving Hall Extension Roof and hydraulically calculated to meet the design criteria outlined in the below, please see extract from CHUBB:-

CHUBB Energy from Waste – Clause 5.3 Tipping Hall

The Tipping Hall should be provided with automatic sprinkler protection throughout. Systems should be designed for a minimum of 10.2 mm/min over the most remote 279 m2 (increase by 30% for dry pipe systems) of floor area with the protection area per sprinkler not to exceed 12.0 m2. High temperature sprinklers 121°C to 149°C should be used.
Waste storage heights in excess of 6.1 m will require higher sprinkler design densities – as per NFPA 13 or the Tipping Hall should be treated as a Bunker and be fitted with fire water monitors as in Fire Water Monitors (Water Cannon) below. Use of Fire Water Monitors on loose MSW and the like can cause problems in that the waste is blown about.

Note: In response to the above ACE recommendation, as advised by the client any waste storage which may be stored inside the Fuel Reception Building will not exceed 6.1 m in height.

/ Designation /	/ Description /
Price reference	Item 3.1
Design Basis	NFPA 13, NFPA 850 & CHUBB Technical Guidance
System	Dry Pipe Sprinkler System
Operating Medium	Water
Mode Of Operation	Automatic
Water Application Rate	10.2L/min/m2
AMAO	279 m2 (30% increase for Dry Pipe)
Estimated Pressure	5 Bar
Number of Sprinklers (approximately)	131
Type of Sprinklers	Quick Response, K-80, Upright Spray Pattern, Brass.

1.6.2: Electrically Actuated Deluge System to Oversized 10tph Shredder

We would propose to install an Automatic / Manual operated Deluge System to provide water spray protection to the Oversized Shredder within fuel receiving hall. The Deluge Valve operation would be manually initiated via a Manual release station at the valve set or automatic actuation via a new Flame Detection system.

Nozzles will be positioned where possible within shredder housing, therefore we may have to utilise MV 'Long Throw' nozzles should only certain sections of the Shredder Housing prove to be accessible.

It is proposed that the system comply with CHUBB standards where possible:-

CHUBB 5.4.4 Shredders
Hammer mill and flail mill type shredder enclosures should also be provided with automatic sprinkler or water spray protection. Systems should be designed for a minimum of 10.2 mm/min over the most remote 279 m2 (increase by 30% for dry pipe systems) of floor area with the protection area per sprinkler not to exceed 9.3 m2. Water spray protection should also be provided within the shredder housings at intake and discharge chutes and within vent shafts.

/ Designation /	/ Description /
Price Reference	Item 3.2
Design Basis	NFPA 13, NFPA 850 & CHUBB Technical Guidance
System Description	Water Spray to Shredder
Operating Medium	Water
Mode of operation	Automatic by Detection / Manual by Pushbutton
No. and type of Control Valve	1No DV-5a
Water Application Rate	10.2mm/min over protected surface
Area of Assumed Maximum Operation	11m2
Estimated System Flow rate (No Hydraulic Gradient)	112L/min
Estimated System Flow rate with Hydraulic Gradient	135L/min
Estimated Minimum Pressure	1.4Bar
Type of Discharge Device	Medium Velocity
Approximate Number of Discharge Devices	6

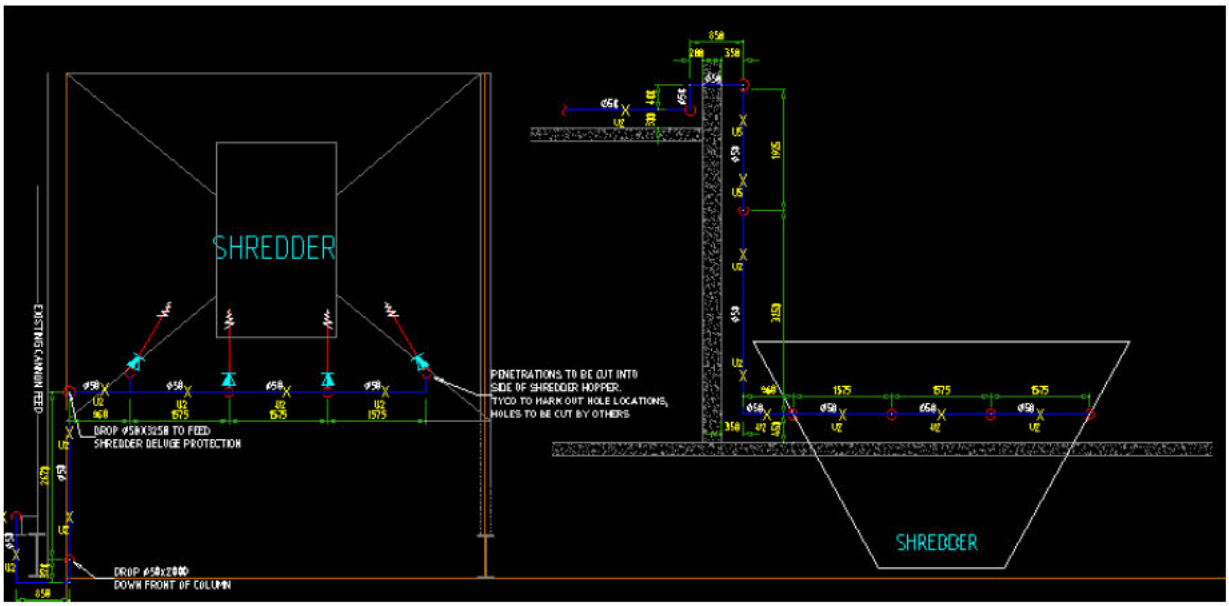

1.6.3: Electrically Actuated Deluge System to Conveyor (From Oversized Shredder to Autoclave)

We have included an Electrically Actuated Deluge Water spray system for the Conveyor which are inclined with open spray nozzles to the top belt / and the return belt. The system would be connected to Normally Dry System Piping. Upon activation of the local electrical fire detection system, the deluge valve is opened via. a solenoid valve on the control valve trim line, and thus water floods the sprinkler system piping, automatically releasing through all of the nozzles on the system deluge zone.

7.2.3.3 Conveyor Belt.

7.2.3.3.1* The water spray system shall be installed to automatically wet the top belt, its contents, and the bottom return belt.

7.2.3.3.2 Discharge patterns of water spray nozzles shall envelop, at a net rate of not less than 0.25 gpm/ft2 [10.2(L/min)/m2],the top and bottom belt surface area, conveyor surfaces where combustible materials are likely to accumulate, the structural parts, and the idler rolls supporting the belt.

7.2.3.3.3 Water spray system protection for belt conveyors shall accomplish either of the following:
(1) Extend onto transfer belts, transfer equipment, and transfer building
(2) Interlock in such a manner that the water spray system protecting the feeding belt will automatically actuate the water spray system protection

/ Designation /	/ Description /
Price Reference	Item 3.3
Design Basis	NFPA 15, NFPA 850 & CHUBB Technical Guidance 2017
System Description	Conveyor Deluge Suppression (Top and Return Belt)
Operating Medium	Water
Mode of operation	Manual/Automatic
No. and type of Control Valve	1 No 100mm Electrically Actuated Deluge Valve DV-5a
Water Application Rate	10.2L/min/m2
Area of Assumed Maximum Operation	75m2 Top Belt and 75m2 Return Belt
Estimated System Flow rate (No Hydraulic Gradient)	1530 L/min
Estimated System Flow rate with Hydraulic Gradient	1836 L/min
Estimated Pressure	5 Bar
Type of Discharge Device	Open Type TY-B Nozzle
Approximate Number of Discharge Devices	50 Top + 50 Return Belt

Please note due to lack of details about proposed conveying systems and type of conveyors used our proposal is based on worst case scenario with protection to product transferring belt and return belt as required by code, we have also made allowance for all conveyors to be hooded type with section of range pipe feeding suppression nozzle to be flexible type for maintenance and access purposes.

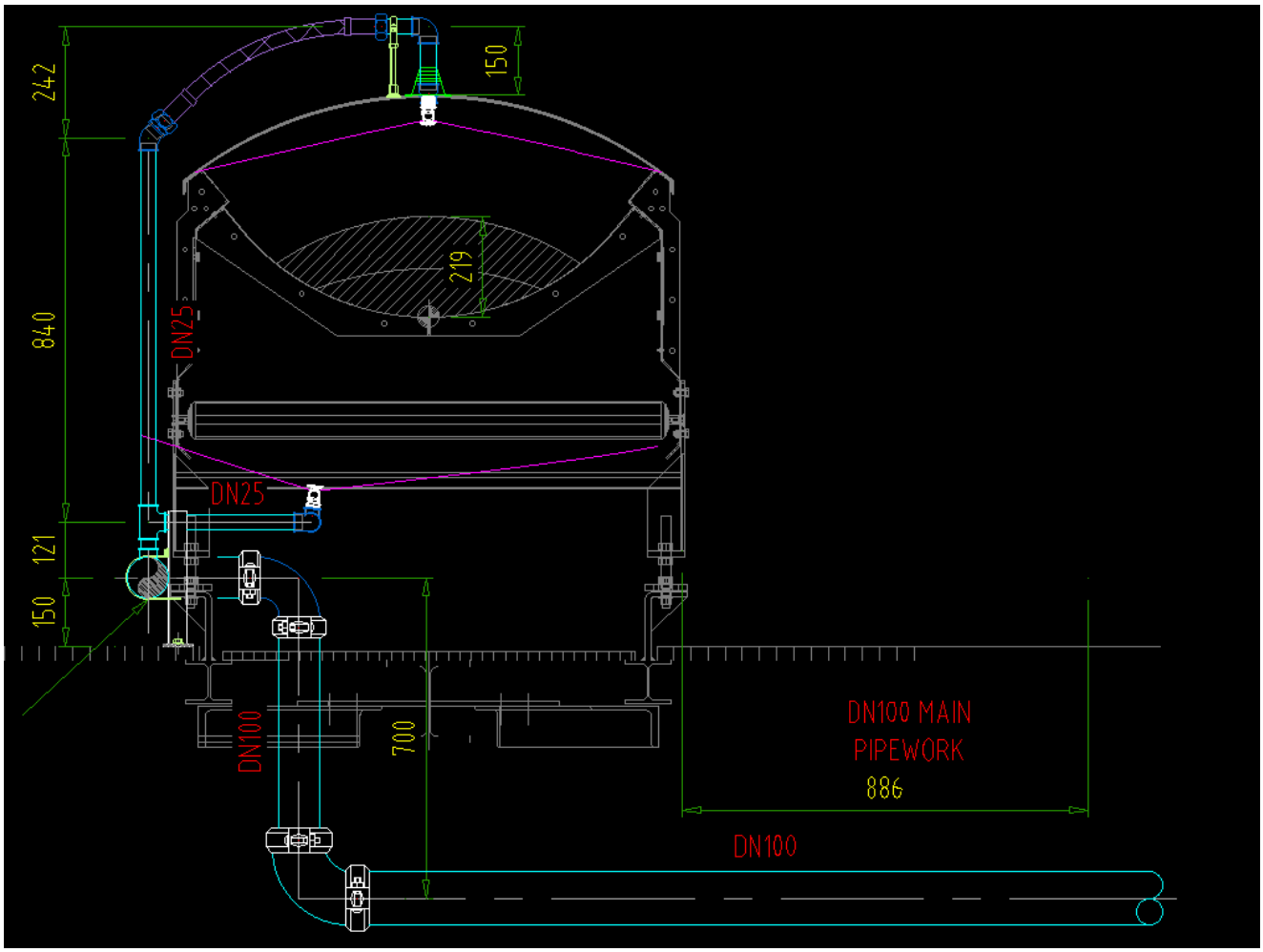

tyco
Fire & Integrated Solutions

1.6.4: Medical Grade Shredders #1

We would propose to install an Automatic / Manual operated Deluge System to provide water spray protection to the Oversized Shredder within fuel receiving hall. The Deluge Valve operation would be manually initiated via a Manual release station at the valve set or automatic actuation via a new Flame Detection system.

Nozzles will be positioned where possible within shredder housing, therefore we may have to utilise MV 'Long Throw' nozzles should only certain sections of the Shredder Housing prove to be accessible.

It is proposed that the system comply with CHUBB standards where possible:-

CHUBB 5.4.4 Shredders
Hammer mill and flail mill type shredder enclosures should also be provided with automatic sprinkler or water spray protection. Systems should be designed for a minimum of 10.2 mm/min over the most remote 279 m2 (increase by 30% for dry pipe systems) of floor area with the protection area per sprinkler not to exceed 9.3 m2. Water spray protection should also be provided within the shredder housings at intake and discharge chutes and within vent shafts.

/ Designation /	/ Description /
Price Reference	Item 4.1
Design Basis	NFPA 13, NFPA 850 & CHUBB Technical Guidance
System Description	Water Spray to Shredder
Operating Medium	Water
Mode of operation	Automatic by Detection / Manual by Pushbutton
No. and type of Control Valve	1No DV-5a
Water Application Rate	10.2mm/min over protected surface
Area of Assumed Maximum Operation	100m2
Estimated System Flow rate (No Hydraulic Gradient)	1020 L/min
Estimated System Flow rate with Hydraulic Gradient	1224 L/min
Estimated Minimum Pressure	1.4Bar
Type of Discharge Device	Medium Velocity
Approximate Number of Discharge Devices	30 (6 Nozzles per Shredder)

1.6.5: Medical Grade Shredders #2

We would propose to install an Automatic / Manual operated Deluge System to provide water spray protection to the Oversized Shredder within fuel receiving hall. The Deluge Valve operation would be manually initiated via a Manual release station at the valve set or automatic actuation via a new Flame Detection system.

Nozzles will be positioned where possible within shredder housing, therefore we may have to utilise MV 'Long Throw' nozzles should only certain sections of the Shredder Housing prove to be accessible.

It is proposed that the system comply with CHUBB standards where possible:-

CHUBB 5.4.4 Shredders
Hammer mill and flail mill type shredder enclosures should also be provided with automatic sprinkler or water spray protection. Systems should be designed for a minimum of 10.2 mm/min over the most remote 279 m2 (increase by 30% for dry pipe systems) of floor area with the protection area per sprinkler not to exceed 9.3 m2. Water spray protection should also be provided within the shredder housings at intake and discharge chutes and within vent shafts.

/ Designation /	/ Description /
Price Reference	Item 4.2
Design Basis	NFPA 13, NFPA 850 & CHUBB Technical Guidance
System Description	Water Spray to Shredder
Operating Medium	Water
Mode of operation	Automatic by Detection / Manual by Pushbutton
No. and type of Control Valve	1No DV-5a
Water Application Rate	10.2mm/min over protected surface
Area of Assumed Maximum Operation	100m2
Estimated System Flow rate (No Hydraulic Gradient)	1020 L/min
Estimated System Flow rate with Hydraulic Gradient	1224 L/min
Estimated Minimum Pressure	1.4Bar
Type of Discharge Device	Medium Velocity
Approximate Number of Discharge Devices	30 (6 Nozzles per Shredder)

1.6.6: Conveyor from Medical Grade Shredders to Autoclave

We have included an Electrically Actuated Deluge Water spray system for the Conveyor which are inclined with open spray nozzles to the top belt / and the return belt. The system would be connected to Normally Dry System Piping. Upon activation of the local electrical fire detection system, the deluge valve is opened via. a solenoid valve on the control valve trim line, and thus water floods the sprinkler system piping, automatically releasing through all of the nozzles on the system deluge zone.

7.2.3.3 Conveyor Belt.

7.2.3.3.1* The water spray system shall be installed to automatically wet the top belt, its contents, and the bottom return belt.

7.2.3.3.2 Discharge patterns of water spray nozzles shall envelop, at a net rate of not less than 0.25 gpm/ft2 [10.2(L/min)/m2],the top and bottom belt surface area, conveyor surfaces where combustible materials are likely to accumulate, the structural parts, and the idler rolls supporting the belt.

7.2.3.3.3 Water spray system protection for belt conveyors shall accomplish either of the following:
(1) Extend onto transfer belts, transfer equipment, and transfer building
(2) Interlock in such a manner that the water spray system protecting the feeding belt will automatically actuate the water spray system protection

/ Designation /	/ Description /
Price Reference	Item 4.3
Design Basis	NFPA 15, NFPA 850 & CHUBB Technical Guidance 2017
System Description	Conveyor Deluge Suppression (Top and Return Belt)
Operating Medium	Water
Mode of operation	Manual/Automatic
No. and type of Control Valve	1 No 100mm Electrically Actuated Deluge Valve DV-5a
Water Application Rate	10.2L/min/m2
Area of Assumed Maximum Operation	70m2 Top Belt and 70m2 Return Belt
Estimated System Flow rate (No Hydraulic Gradient)	1428 L/min
Estimated System Flow rate with Hydraulic Gradient	1714 L/min
Estimated Pressure	5 Bar
Type of Discharge Device	Open Type TY-B Nozzle
Approximate Number of Discharge Devices	47 Top + 47 Return Belt

1.6.7: Conveyor Autoclave Output

We have included an Electrically Actuated Deluge Water spray system for the Conveyor which are inclined with open spray nozzles to the top belt / and the return belt. The system would be connected to Normally Dry System Piping. Upon activation of the local electrical fire detection system, the deluge valve is opened via. a solenoid valve on the control valve trim line, and thus water floods the sprinkler system piping, automatically releasing through all of the nozzles on the system deluge zone.

7.2.3.3 Conveyor Belt.

7.2.3.3.1* The water spray system shall be installed to automatically wet the top belt, its contents, and the bottom return belt.

7.2.3.3.2 Discharge patterns of water spray nozzles shall envelop, at a net rate of not less than 0.25 gpm/ft2 [10.2(L/min)/m2],the top and bottom belt surface area, conveyor surfaces where combustible materials are likely to accumulate, the structural parts, and the idler rolls supporting the belt.

7.2.3.3.3 Water spray system protection for belt conveyors shall accomplish either of the following:
(1) Extend onto transfer belts, transfer equipment, and transfer building
(2) Interlock in such a manner that the water spray system protecting the feeding belt will automatically actuate the water spray system protection

/ Designation /	/ Description /
Price Reference	Item 4.4
Design Basis	NFPA 15, NFPA 850 & CHUBB Technical Guidance 2017
System Description	Conveyor Deluge Suppression (Top and Return Belt)
Operating Medium	Water
Mode of operation	Manual/Automatic
No. and type of Control Valve	1 No 100mm Electrically Actuated Deluge Valve DV-5a
Water Application Rate	10.2L/min/m2
Area of Assumed Maximum Operation	44m2 Top Belt and 44m2 Return Belt
Estimated System Flow rate (No Hydraulic Gradient)	898 L/min
Estimated System Flow rate with Hydraulic Gradient	1077 L/min
Estimated Pressure	5 Bar
Type of Discharge Device	Open Type TY-B Nozzle
Approximate Number of Discharge Devices	30 Top + 30 Return Belt

1.6.8: Clean Bin Storage Area

Sprinkler Protection has been included to the Clean Bin Storage Area and hydraulically calculated to meet the design criteria outlined in the below, please see extract from CHUBB:-

CHUBB Energy from Waste – Clause 5.3 Tipping Hall

The Tipping Hall should be provided with automatic sprinkler protection throughout. Systems should be designed for a minimum of 10.2 mm/min over the most remote 279 m2 (increase by 30% for dry pipe systems) of floor area with the protection area per sprinkler not to exceed 12.0 m2. High temperature sprinklers 121°C to 149°C should be used.
Waste storage heights in excess of 6.1 m will require higher sprinkler design densities – as per NFPA 13 or the Tipping Hall should be treated as a Bunker and be fitted with fire water monitors as in Fire Water Monitors (Water Cannon) below. Use of Fire Water Monitors on loose MSW and the like can cause problems in that the waste is blown about.

Note: In response to the above ACE recommendation, as advised by the client any waste storage which may be stored inside the Fuel Reception Building will not exceed 6.1 m in height.

/ Designation /	/ Description /
Price reference	Item 4.5
Design Basis	NFPA 13, NFPA 850 & CHUBB Technical Guidance
System	Dry Pipe Sprinkler System
Operating Medium	Water
Mode Of Operation	Automatic
Water Application Rate	10.2L/min/m2
AMAO	279 m2 (30% increase for Dry Pipe)
Estimated Pressure	5 Bar
Number of Sprinklers (approximately)	56
Type of Sprinklers	Quick Response, K-80, Upright Spray Pattern, Brass.

1.6.9: Conveyor Autoclave to Storage Zone #1

We have included an Electrically Actuated Deluge Water spray system for the Conveyor which are inclined with open spray nozzles to the top belt / and the return belt. The system would be connected to Normally Dry System Piping. Upon activation of the local electrical fire detection system, the deluge valve is opened via. a solenoid valve on the control valve trim line, and thus water floods the sprinkler system piping, automatically releasing through all of the nozzles on the system deluge zone.

7.2.3.3 Conveyor Belt.

7.2.3.3.1* The water spray system shall be installed to automatically wet the top belt, its contents, and the bottom return belt.

7.2.3.3.2 Discharge patterns of water spray nozzles shall envelop, at a net rate of not less than 0.25 gpm/ft2 [10.2(L/min)/m2],the top and bottom belt surface area, conveyor surfaces where combustible materials are likely to accumulate, the structural parts, and the idler rolls supporting the belt.

7.2.3.3.3 Water spray system protection for belt conveyors shall accomplish either of the following:
(1) Extend onto transfer belts, transfer equipment, and transfer building
(2) Interlock in such a manner that the water spray system protecting the feeding belt will automatically actuate the water spray system protection

/ Designation /	/ Description /
Price Reference	Item 4.6
Design Basis	NFPA 15, NFPA 850 & CHUBB Technical Guidance 2017
System Description	Conveyor Deluge Suppression (Top and Return Belt)
Operating Medium	Water
Mode of operation	Manual/Automatic
No. and type of Control Valve	1 No 100mm Electrically Actuated Deluge Valve DV-5a
Water Application Rate	10.2L/min/m2
Area of Assumed Maximum Operation	55m2 Top Belt and 55m2 Return Belt
Estimated System Flow rate (No Hydraulic Gradient)	1122 L/min
Estimated System Flow rate with Hydraulic Gradient	1346 L/min
Estimated Pressure	5 Bar
Type of Discharge Device	Open Type TY-B Nozzle
Approximate Number of Discharge Devices	37 Top + 37 Return Belt

1.6.10: Waste Bunker Water Monitors

We have included for the supply of 2 number water monitors to protect the EFW Waste Storage Pit, in accordance with the requirements of NFPA850 and CHUBB technical guidance:-

5.4.2 Bunker Fire Water Monitors (Water Cannon)

In addition to sprinkler protection, MSW and RDF Bunkers should be provided with automatic monitor nozzle protection (water cannon) designed to furnish a minimum of 946 lpm at 6.89 bar at the tip. Monitors should be located so as to allow for coverage of all pit areas with at least two (2) streams operating simultaneously. Due to frequency of use and potential for operator fire exposure, automatic oscillating monitor nozzles with manual override should be provided and the monitors should be capable of remote operation from the central Control Room.

Fire water monitors should not be installed in any area where they can affect the operation or maintenance of the refuse cranes and should be protected by steel frameworks to avoid damage from the waste grabs.
Electrical cabling to the water monitors should be a minimum of 2 hour fire resistance rating and be protected from physical damage.

Please see details below of the offered monitors:-

- We have included for the supply of 2 No.FJM80 Fixed Water Monitors. Movement of the monitors can be automatic oscillation, following automatic activation via the infra-red camera scanning system, or manual control can be initiated using a remote control station.
- Water cannons can be operated locally or remotely operated from the control room located next to the EFW Bunker Pit. We have included for the supply of individual control valves on each of the 2 No. waste bunker cannons. This will allow individual operation (on/off) of each cannon so that it will not be necessary to always have both cannons operational. From our experience on other EFW plants, we feel that this is a necessary inclusion and provides the operator with the flexibility of selecting the correct monitor and delivering the required Water Solution to the required area affected in the Bunker via the Remote Controlled Monitor Joy Stick Controls. (Please see drawing of monitor arrangement from a previous project.)
- The system has been designed for the simultaneous operation of 2 number monitors.
- The monitor control panel would have the following facilities for operation:-

Control Panel; desk top with following details

- 2 x Joy-stick
- 2 x Fog/Jet selector switch
- 2 x auto-oscillate on/off selector switch
- 1 x Common automatic oscillation control via start signal from fire detection system (e.g. thermal imaging camera) 2 x Monitor water supply on/off selector switch

Typical view of Bunker Monitor arrangement c/w On/off deluge valve.

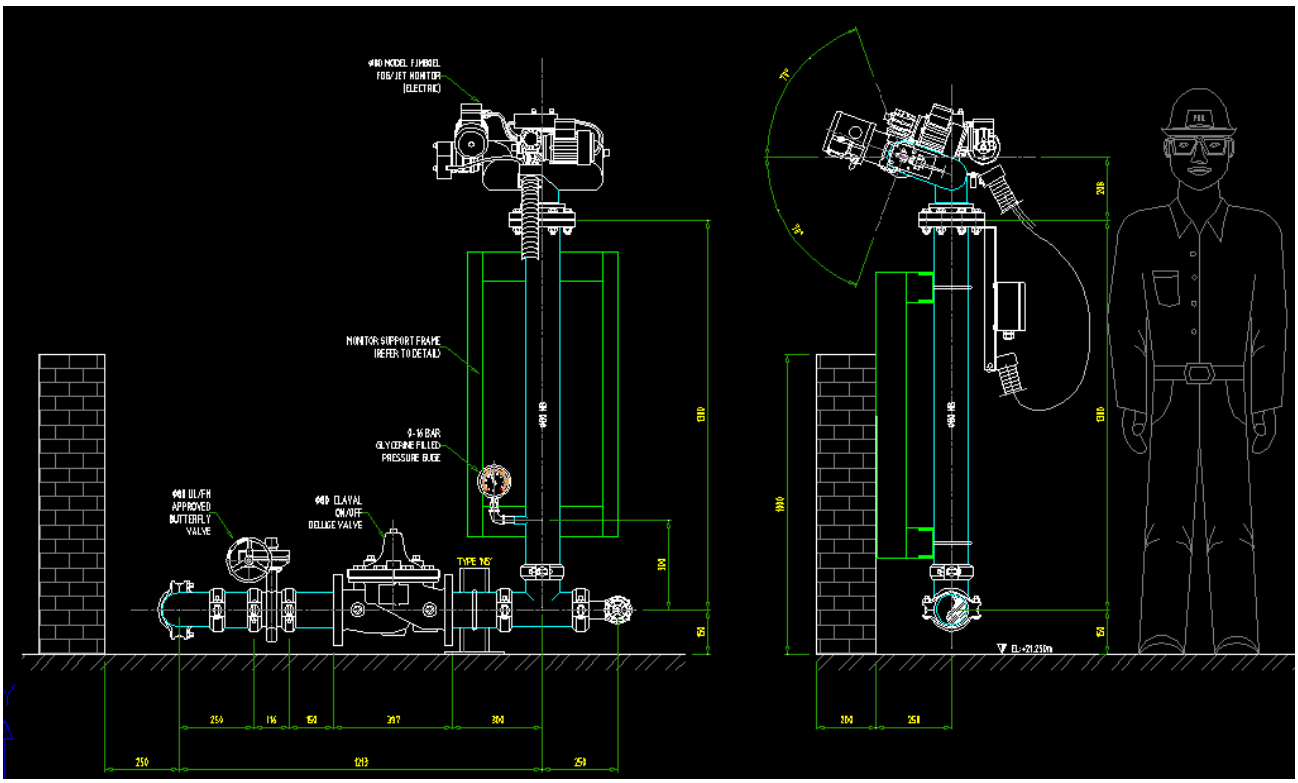

tyco
Fire & Integrated Solutions

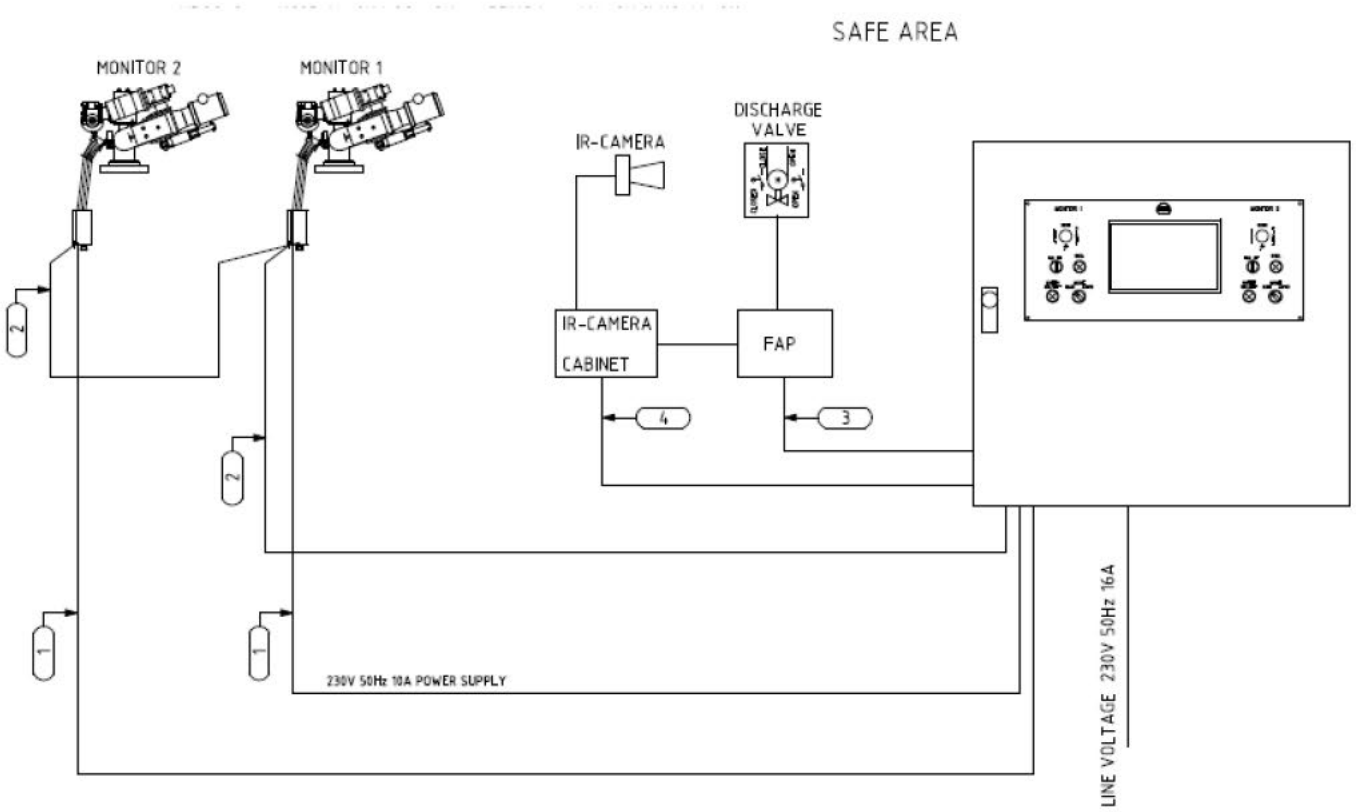

/ Designation /	/ Description /
Price Reference	Item 5.1
Design Basis	CHUBB Technical Guidance 2017
System Description	Fire Water Monitors
Number of Monitors	2No
Operating Medium	Water
Mode of operation	Automatic/manual
Estimated Flow Rate	946 L/min
Estimated Pressure to achieve required throw	5 Bar

1.6.11: Processed Waste Dryer

We would propose to install an Automatic / Manual operated Deluge System to provide water spray protection to the Waste Dryer within fuel receiving hall. The Deluge Valve operation would be manually initiated via a Manual release station at the valve set or automatic actuation via a new Flame Detection system.

Nozzles will be positioned where possible within shredder housing, therefore we may have to utilise MV 'Long Throw' nozzles should only certain sections of the Shredder Housing prove to be accessible.

It is proposed that the system comply with CHUBB standards where possible:-

4.4.4 Hoppers
Waste feed hoppers either feeding conveyors, shredders, the furnace directly or waste compactors should have automatic deluge protection designed for a minimum of 8.1 mm/min over the entire Hopper, with the protection area per deluge head not to exceed 12.0 m2. Manual activation of the Hopper deluge system should also be possible from the Control Room.

/ Designation /	/ Description /
Price Reference	Item 5.2
Design Basis	NFPA 13, NFPA 850 & CHUBB Technical Guidance
System Description	Water Spray to Dryer
Operating Medium	Water
Mode of operation	Automatic by Detection / Manual by Pushbutton
No. and type of Control Valve	1No DV-5a
Water Application Rate	8.1 mm/min over protected surface
Area of Assumed Maximum Operation	18m2
Estimated System Flow rate (No Hydraulic Gradient)	146 L/min
Estimated System Flow rate with Hydraulic Gradient	175 L/min
Estimated Minimum Pressure	1.4Bar
Type of Discharge Device	Medium Velocity
Approximate Number of Discharge Devices	6

1.6.12: Processed Waste Separator

We would propose to install an Automatic / Manual operated Deluge System to provide water spray protection to the Waste Separator within fuel receiving hall. The Deluge Valve operation would be manually initiated via a Manual release station at the valve set or automatic actuation via a new Flame Detection system.

Nozzles will be positioned where possible within shredder housing, therefore we may have to utilise MV 'Long Throw' nozzles should only certain sections of the Shredder Housing prove to be accessible.

It is proposed that the system comply with CHUBB standards where possible:-

4.4.4 Hoppers
Waste feed hoppers either feeding conveyors, shredders, the furnace directly or waste compactors should have automatic deluge protection designed for a minimum of 8.1 mm/min over the entire Hopper, with the protection area per deluge head not to exceed 12.0 m2. Manual activation of the Hopper deluge system should also be possible from the Control Room.

/ Designation /	/ Description /
Price Reference	Item 5.3
Design Basis	NFPA 13, NFPA 850 & CHUBB Technical Guidance
System Description	Water Spray to Dryer
Operating Medium	Water
Mode of operation	Automatic by Detection / Manual by Pushbutton
No. and type of Control Valve	1No DV-5a
Water Application Rate	8.1 mm/min over protected surface
Area of Assumed Maximum Operation	18m2
Estimated System Flow rate (No Hydraulic Gradient)	146 L/min
Estimated System Flow rate with Hydraulic Gradient	175 L/min
Estimated Minimum Pressure	1.4Bar
Type of Discharge Device	Medium Velocity
Approximate Number of Discharge Devices	6

1.6.13: Conveyor Autoclave to Storage Zone #2

We have included an Electrically Actuated Deluge Water spray system for the Conveyor which are inclined with open spray nozzles to the top belt / and the return belt. The system would be connected to Normally Dry System Piping. Upon activation of the local electrical fire detection system, the deluge valve is opened via. a solenoid valve on the control valve trim line, and thus water floods the sprinkler system piping, automatically releasing through all of the nozzles on the system deluge zone.

7.2.3.3 Conveyor Belt.

7.2.3.3.1* The water spray system shall be installed to automatically wet the top belt, its contents, and the bottom return belt.

7.2.3.3.2 Discharge patterns of water spray nozzles shall envelop, at a net rate of not less than 0.25 gpm/ft2 [10.2(L/min)/m2],the top and bottom belt surface area, conveyor surfaces where combustible materials are likely to accumulate, the structural parts, and the idler rolls supporting the belt.

7.2.3.3.3 Water spray system protection for belt conveyors shall accomplish either of the following:
(1) Extend onto transfer belts, transfer equipment, and transfer building
(2) Interlock in such a manner that the water spray system protecting the feeding belt will automatically actuate the water spray system protection

/ Designation /	/ Description /
Price Reference	Item 5.4
Design Basis	NFPA 15, NFPA 850 & CHUBB Technical Guidance 2017
System Description	Conveyor Deluge Suppression (Top and Return Belt)
Operating Medium	Water
Mode of operation	Manual/Automatic
No. and type of Control Valve	1 No 100mm Electrically Actuated Deluge Valve DV-5a
Water Application Rate	10.2L/min/m2
Area of Assumed Maximum Operation	55m2 Top Belt and 55m2 Return Belt
Estimated System Flow rate (No Hydraulic Gradient)	1122 L/min
Estimated System Flow rate with Hydraulic Gradient	1346 L/min
Estimated Pressure	5 Bar
Type of Discharge Device	Open Type TY-B Nozzle
Approximate Number of Discharge Devices	37 Top + 37 Return Belt

1.6.14: Advanced Pyrolysis Feed Conveyor

We have included an Electrically Actuated Deluge Water spray system for the Advanced Pyrolysis Feed Conveyor with open spray nozzles to the top belt / and the return belt. The system would be connected to Normally Dry System Piping. Upon activation of the local electrical fire detection system, the deluge valve is opened via. a solenoid valve on the control valve trim line, and thus water floods the sprinkler system piping, automatically releasing through all of the nozzles on the system deluge zone.

7.2.3.3 Conveyor Belt.

7.2.3.3.1* The water spray system shall be installed to automatically wet the top belt, its contents, and the bottom return belt.

7.2.3.3.2 Discharge patterns of water spray nozzles shall envelop, at a net rate of not less than 0.25 gpm/ft2 [10.2(L/min)/m2],the top and bottom belt surface area, conveyor surfaces where combustible materials are likely to accumulate, the structural parts, and the idler rolls supporting the belt.

7.2.3.3.3 Water spray system protection for belt conveyors shall accomplish either of the following:
(1) Extend onto transfer belts, transfer equipment, and transfer building
(2) Interlock in such a manner that the water spray system protecting the feeding belt will automatically actuate the water spray system protection

/ Designation /	/ Description /
Price Reference	Item 5.5
Design Basis	NFPA 15, NFPA 850 & CHUBB Technical Guidance 2017
System Description	Conveyor Deluge Suppression (Top and Return Belt)
Operating Medium	Water
Mode of operation	Manual/Automatic
No. and type of Control Valve	1 No 100mm Electrically Actuated Deluge Valve DV-5a
Water Application Rate	10.2L/min/m2
Area of Assumed Maximum Operation	42m2 Top Belt and 42m2 Return Belt
Estimated System Flow rate (No Hydraulic Gradient)	857 L/min
Estimated System Flow rate with Hydraulic Gradient	1029 L/min
Estimated Pressure	5 Bar
Type of Discharge Device	Open Type TY-B Nozzle
Approximate Number of Discharge Devices	21 Top + 21 Return Belt

1.6.15: Export Conveyor

We have included an Electrically Actuated Deluge Water spray system for the Export Conveyor with open spray nozzles to the top belt / and the return belt. The system would be connected to Normally Dry System Piping. Upon activation of the local electrical fire detection system, the deluge valve is opened via. a solenoid valve on the control valve trim line, and thus water floods the sprinkler system piping, automatically releasing through all of the nozzles on the system deluge zone.

7.2.3.3 Conveyor Belt.

7.2.3.3.1* The water spray system shall be installed to automatically wet the top belt, its contents, and the bottom return belt.

7.2.3.3.2 Discharge patterns of water spray nozzles shall envelop, at a net rate of not less than 0.25 gpm/ft2 [10.2(L/min)/m2],the top and bottom belt surface area, conveyor surfaces where combustible materials are likely to accumulate, the structural parts, and the idler rolls supporting the belt.

7.2.3.3.3 Water spray system protection for belt conveyors shall accomplish either of the following:
(1) Extend onto transfer belts, transfer equipment, and transfer building
(2) Interlock in such a manner that the water spray system protecting the feeding belt will automatically actuate the water spray system protection

/ Designation /	/ Description /
Price Reference	Item 5.5
Design Basis	NFPA 15, NFPA 850 & CHUBB Technical Guidance 2017
System Description	Conveyor Deluge Suppression (Top and Return Belt)
Operating Medium	Water
Mode of operation	Manual/Automatic
No. and type of Control Valve	1 No 100mm Electrically Actuated Deluge Valve DV-5a
Water Application Rate	10.2L/min/m2
Area of Assumed Maximum Operation	55m2 Top Belt and 55m2 Return Belt
Estimated System Flow rate (No Hydraulic Gradient)	1022 L/min
Estimated System Flow rate with Hydraulic Gradient	1347 L/min
Estimated Pressure	5 Bar
Type of Discharge Device	Open Type TY-B Nozzle
Approximate Number of Discharge Devices	37 Top + 37 Return Belt

1.7: COMPONENT DESCRIPTIONS

1.7.1: Piping, Fittings and Supports

All installation pipework where free standing would be supported by purpose made standpipes and elsewhere by the attachment of standard and purpose made brackets to the building structure.

/ Designation /	/ Description /
Tube:	BS EN 10255 Medium all system pipework.
Flanges:	BSEN1092 NP16/3 Slip on Plate Type
Butt-weld Fittings:	BSEN10253 to Suit Pipework detailed above Pre-Galvanised Malleable Fittings BSP
Welding Standard:	BS2971 CLASS II Work Carried out by Qualified Coded Welders (STT/MIG/MAG Process)
Sockets:	BSEN10241 – BSPT
Corrosion Protection	65nb to 200nb Galvanising after manufacture BS EN 1461. 25nb to 50nb from pre-galvanised material. BS EN 1461. Normally Dry Piping – Galvanised & Unpainted Normally Wet Piping – Painted red oxide

All installation pipework where free standing would be supported by purpose made standpipes and elsewhere by the attachment of standard and purpose made brackets to the building structure.

Pipework would be supplied in a galvanised finish to BS EN-ISO 1461 and painted where applicable in accordance with the enquiry specifications and environmental conditions.

Following approval/comment by the client, or other approving authority, of our detailed system layouts, all pipework where practicable would be fabricated in our workshops, prior to being delivered to site.

Screwed pipework, having fittings made on and being cut to correct length, would be marked with an identification code and transported to site in bundles to facilitate on site handling, storage and sorting for speed of erection.

Similarly, sections of welded pipework would be given an identification code with all pipework being checked for dimensional accuracy prior to despatch.

All physical dimensions needed for prefabrication would be extracted from the client's drawings. Should prefabricated pipework have to be majorly modified as a result of incorrect drawing information, then the additional work involved would be the subject of a contract variation.

1.7.2: Automatic Deluge Valve

Deluge fire protection systems are normally used in special hazard installations where an entire area application of water or foam is required for protection. Applications may include flammable liquid handling and storage areas, aircraft hangars, and other high-hazard installations where water is the most effective extinguishing agent. Deluge systems employ open sprinklers or spray nozzles attached to a piping system. The system is connected to a water supply through the deluge valve. This valve is opened by the operation of a fire detection system installed in the same areas as the open sprinklers or nozzles. Deluge systems may be activated by wet or dry pilot sprinklers, or electric detectors. When the deluge valve opens, water flows into the piping system and discharges from all open sprinklers and nozzles.

DV-5A Deluge Systems, Wet Pilot

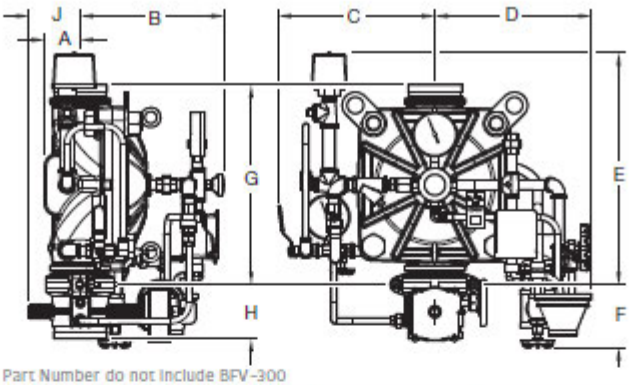

Part Number do not include BFV-300

Wet Pilot Deluge System with Galvanised Trim – Part No.						System Size		Approval & Listings			
T x T ISO	G x G	F x G ISO	F x F ISO	F x G ANSI	F x F ANSI	DN	in	UL	FM	VdS	LPCB
550170115	550110115	–	–	–	–	40	1-½"	√	√	√	√
550170120	550110120	–	–	–	–	50	2"	√	√	√	√
–	550110130	550150130	550140130	550130130	550120130	80	3"	√	√	√	√
–	550110140	550150140	550140140	550130140	550120140	100	4"	√	√	√	√
–	550110160	550150160	550140160	550130160	550120160	150	6"	√	√	√	√
–	550110180	550150180	550140180	550130180	550120180	200	8"	√	√	√	√

System Size		Dimension mm								
DN	in	A	B	C	D	E	F	G	H	J
40	1-½"	71	246	264	323	411	185	259	203	31
50	2"	71	246	264	323	411	185	259	97	74
80	3"	76	277	305	320	455	147	351	99	91
100	4"	76	310	333	358	498	130	427	114	109
150	6"	114	345	381	417	566	86	569	150	145
200	8"	135	414	437	495	699	74	699	132	170

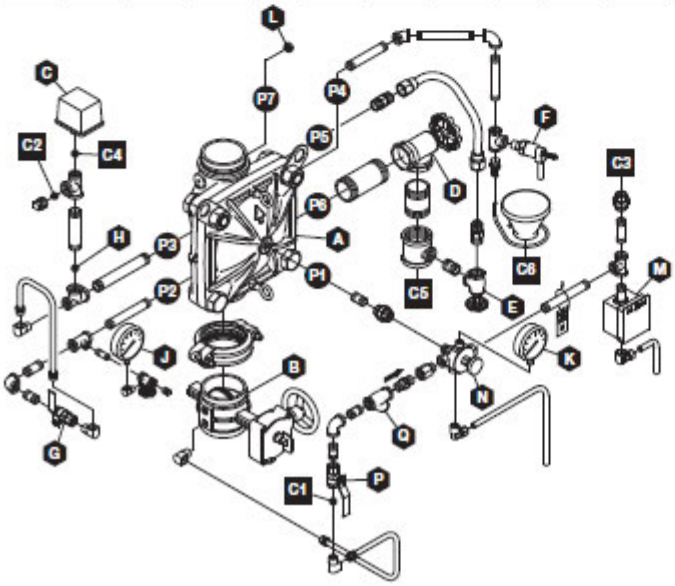

Pos.	Description
A	DV-5a Valve
B	System Main Control Valve
C	Waterflow Pressure Switch
D	Main Drain Valve
E	System Drain Valve
F	Automatic Drain Valve
G	Alarm Test Valve
H	Alarm Control Valve (Optional)
J	Water Supply Gauge
K	Diaphragm Gauge
L	System Gauge (Optional)
M	Manual Control Station
N	Manual Reset Actuator
P	Diaphragm Supply Valve
Q	Diaphragm Supply Strainer
C1	Diaphragm Supply Connection
C2	Water Motor Alarm Connection
C3	Wet Pilot Line Connection
C4	Waterflow Pressure Alarm Switch Connection
C5	Main Drain Connection
C6	Drip Funnel Drain Connection
P1	Diaphragm Chamber Supply
P2	Water Supply Pressure & Alarm Test
P3	Alarm Actuation
P4	Automatic Drain Valve
P5	System Drain
P6	Main Drain
P7	System Air Supply Not Used for Deluge

1.7.3: Dry Type Sprinkler System Control Valve

Dry System Valve Assemblies DPV-1 with FM Trim DN150

Standard Assembly:

- Dry Alarm Valve [DPV-1]
- Accelerator [ACC-1]
- Pressure Alarm Switch [PS10-1]
- No Stop Valve*

*For Stop Valve see chapter 3, needs to be ordered separately

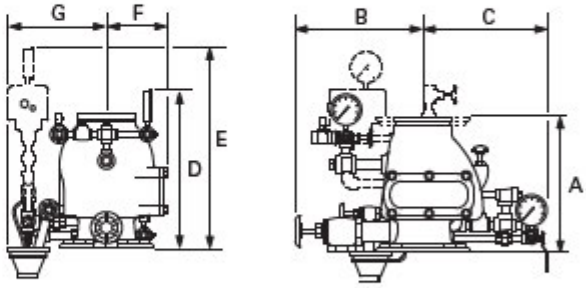

DPV-1 FM Dry System Valve Assembly with FM Trim, DN150 - TFP1020												
Part No.	DN		Inlet	Outlet	Dimensions							Weight kg
					A mm	B mm	C mm	D mm	E mm	F mm	G mm	
2767200101	150	6"	PN10/16	PN10/16	406	380	375	475	600	190	290	78
2867200101	150 [168,3mm]	6"	PN10/16	GRV	406	380	375	475	600	190	290	73
2B67200101	150 [168,3mm]	6"	GRV	GRV	406	380	375	475	600	190	290	78

Other options available on request

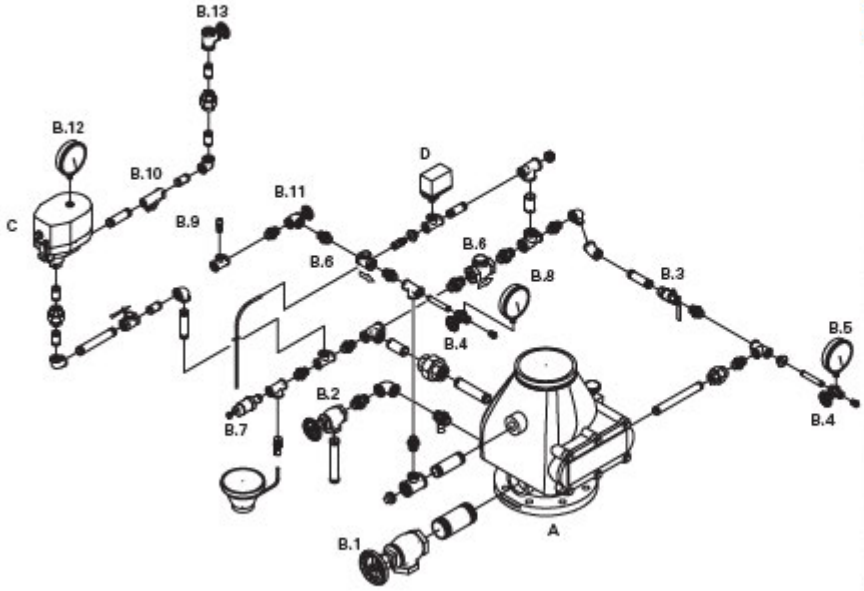

Pos.	Description
A	Dry Alarm Valve DPV-1
B	Alarm Valve Trim, including:
B.1	Main Drain Valve
B.2	Low Body Drain Valve
B.3	Alarm Test Shut Off Valve 3-way [supervised]
B.4	Gauge Test Valve
B.5	Water Supply Pressure Gauge
B.6	Check Valve
B.7	Automatic Drain Valve
B.8	System Air Pressure Gauge
B.9	Manifold
B.10	Air Supply Control Valve
B.11	Accelerator Pressure Gauge
B.12	Accelerator Control Valve [supervised]
C	Accelerator ACC-1
D	Pressure Alarm Switch PS10-1
E	Supervised Gate Valve [OS-47]

1.7.4: Medium Velocity Spray Nozzle

MV

Medium Velocity Nozzle

Thread Size	½" NPT
Approvals	UL, FM*, SAS, Ukrainian, Fire Academy of Russia, PAVUS, T/S/U * Titanium is not FM approved
Spray Angles	90°, 95°, 110°, 125°, 140°, and 160°
Nozzle Finish	Stainless Steel, Brass & Leaded Gunmetal LG2, Titanium, or 254 SMO
Wrench Type	Appropriate size adjustable Crescent wrench
Tech Data Sheet	TFP807

Nozzles with an orifice smaller than 9.5 mm include a filter. ■ Nozzles can be coated or made in special material on request. ■ Spray patterns are available on request.

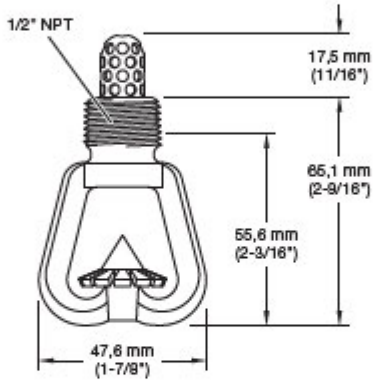

MV - ½" NPT													
K-Factors		MV10	MV12	MV15	MV18	MV19	MV21	MV25	MV26	MV30	MV34	MV47	MV57
Ø	mm	5.1	5.4	6.3	6.8	7.1	7.7	8.3	8.8	9	9.6	11.2	12.6
Ø	inch	0.2	0.21	0.25	0.27	0.28	0.31	0.33	0.35	0.36	0.38	0.44	0.5
K	Metric	15.9	18	23.8	28	30.2	34	38.2	42	50	58.8	80	99.5
K	USA	1.1	1.25	1.65	1.94	2.09	2.36	2.65	2.91	3.47	4.07	5.54	6.9

MV - ½" NPT														
Model No.	Brass and Leaded Gunmetal LG2 Part No.						Approvals & Listings						
	90°	95°	110°	125°	140°	160°	UL	FM	SAS	Ukrainian	PAVUS	T/S/U	Fire Academy of Russia
MV10	AED03829	AEA02524	AEA02533	AEA02542	AEA02551	AEA02560	√	√	√	√	√	√	√
MV12	AED03838	AED03847	AED03856	AED03865	AED03874	AED03883	√	√	√	√	√	√	√
MV15	AED03892	AEA02588	AEA02597	AEA02609	AEA02618	AEA02627	√	√	√	√	√	√	√
MV18	AED03904	AED03913	AED03922	AED03931	AED03940	AED03959	√	√	√	√	√	√	√
MV19	AED03968	AEA02645	AEA02654	AEA02663	AEA02672	AEA02681	√	√	√	√	√	√	√
MV21	AED03977	AED03986	AED03995	AED04004	AED04013	AED04022	√	√	√	√	√	√	√
MV25	AED04031	AEA02702	AEA02711	AEA02720	AEA02739	AEA02748	√	√	√	√	√	√	√
MV26	AED04040	AED04059	AED04068	AED04077	AED04086	AED04095	√	√	√	√	√	√	√
MV30	AED04107	AED04116	AED04125	AED04134	AED04143	AED04152	√	√	√	√	√	√	√
MV34	AED04161	AED00949	AED00958	AED00967	AED00976	AED00985	√	√	√	√	√	√	√
MV47	AED04170	AED01003	AED01012	AED01021	AED01030	AED01049	√	√	√	√	√	√	√
MV57	AED04189	AED01067	AED01076	AED01085	AED01094	AED01106	√	√	√	√	√	√	√

Medium velocity spray nozzles would be manufactured in brass, Loss Prevention Council Board / FM approved and UL listed. The nozzle produces an evenly distributed hemispherical spray characteristic and is designed primarily for general surface cooling and/or the extinguishment of fuels having a flashpoint less than 66oC. The nozzle is designed to operate within a discharge pressure range of 1.4 to 3.5 Bars.
Spray nozzles are available with a choice of discharge orifice size and water spray angle. This enables the most suited nozzle to be selected from a wide variety of water discharge rates and water distribution patterns thereby achieving economical usage of water whilst providing effective coverage.

1.7.5: Sprinkler Head

Roof & under obstruction sprinklers

Sprinkler heads would be 15/20mm diameter conventional/spray pattern having
Loss Prevention Council Board / FM, approval and UL listing.

The sprinkler operates automatically when the heat actuated element is heated to above its temperature rating. As the water is released from the sprinkler orifice it is projected onto a circular deflector thus ensuring well distributed spray and providing coverage on plan up to a maximum of 12 square metres.

A range of sprinkler operating temperatures are available to suit different ambient room temperature conditions, the standard sprinkler operating temperature being 68oC.

Open Type Sprinkler

15mm/20mm diameter open type brass sprinkler heads would be of the conventional/spray pattern and manufactured without the temperature sensitive element and water retaining seal.

The water discharges from the sprinkler orifice onto a circular and serrated deflector which produces an evenly distributed spray. Each sprinkler will provide blanket protection to plan areas of fire risk up 12 square metres.

Sprinkler would be LPCB / FM approved and UL listed.

TY-B

Upright, Pendent & Recessed Pendent

- All hazard
- 5 mm bulb
- Discharges a hemispherical water spray pattern in the area beneath the sprinkler
- Small frame, narrow profile bulb
- Designed for use in light, ordinary, or extra hazard, commercial occupancies such as banks, hotels, shopping malls, factories, refineries, chemical plants, etc.

K FACTOR	K=2.8 (40,3) • K=5.6 (80,6), K=8.0 (115,2)
THREAD SIZE	½" NPT • ¾" NPT
APPROVALS	K=2.8 – UL, C-UL, FM K=5.6 – UL, C-UL, FM, CE, VdS K=8.0 – UL, C-UL, FM, LPCB, NYC, VdS
TEMPERATURE	135°F/57°C, 155°F/68°C, 175°F/79°C, 200°F/93°C, 286°F/141°C, 360°F/182°C
ESCUTCHEON	K=2.8 – Style 10 • Style 40 K=5.6 – Style 15 • Style 20 K=8.0 – Style 10 • Style 40
ESCUTCHEON FINISH	Signal or Pure White, Jet Black, Chrome Plated, Natural Brass
SPRINKLER FINISH	Natural Brass, Chrome Plated, Pure White, Signal White, Jet Black, Lead Coated, Wax Coated, Wax over Lead Coated
SIN	TY1151, TY1251, TY315, TY325, TY4151, TY4251, TY4851, TY4951
TECH DATA	K=2.8 & K=8.0 – TFP151 K=5.6 – TFP152

K=5.6 Shown

Sprinkler Wrenches

1.7.6 FJM Self Oscillating Monitor

Fog/Jet Monitor Electrical FJM-EL

General Description

Powerful fire extinguishing monitor with exceptionally good flow characteristics and remote control operation. Electric motor driven elevation and rotation movement with solenoid valve or linear actuator operated fog/jet pattern adjustment.

Application Description

Designed for fixed mounting, the FJM-EL is optimised to deliver water and foam. Varying water to fog pattern delivery is adjustable by remote control.

Product Features

- Wide capacity range
- Adjustable flow to nominal capacity
- Compact, balanced design
- Easily manoeuvred due to low friction bearings
- Long throw length
- Adjustable stream pattern
- Corrosion resistant construction of stainless steel and bronze
- Integrated electrical junction box
- Available with ATEX approved electrical equipment

Connections

- Foam/water inlet: flanged according to DIN PN 16, JIS 10K or ANSI 150 lbs

Optional Components

- Control and operating panel, custom built solutions on request
- Built-in inductor optional on all models
- Power supply from 24V DC to 440V AC available
- Optional suction hose and valve
- Special versions with cast iron motors and gearboxes available

Listings and Approvals

- Det Norske Veritas (DNV)
- Bureau Veritas (BV) FJM-200EL only
- Russian Maritime Register of Shipping (RMRS)
- CNBOP (Poland) FJM-100EL only

FJM-80 EL LA

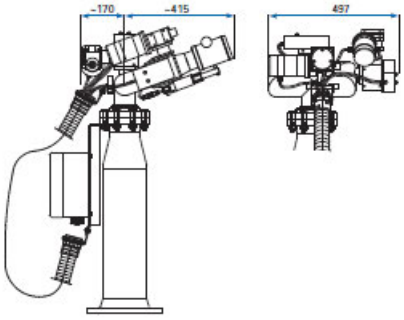

FJM-80 Monitor - Range of Jet

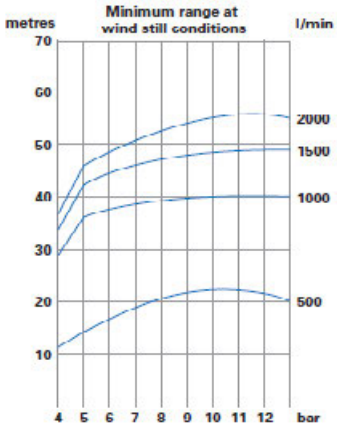

1.7.7: Isolation Valves

We propose the following valves:-

Model BFV-300/BFV-300C Butterfly Valve Grooved End

General Description

The TYCO Models BFV-300 and BFV-300C Grooved End Butterfly Valves are indicating type valves designed for use in fire protection systems where a visual indication of open or closed valve condition is required. They are used, for example, as system, sectional and pump water control valves. They have grooved inlet and outlet connections that are suitable for use with grooved end pipe couplings listed or approved for fire protection systems.

For applications requiring supervision of the open or closed state of the valve, the Gear Operators for the Model BFV-300/BFV-300C Butterfly Valves feature two sets of factory installed internal switches each having SPDT contacts (Ref. Figure 3). The supervisory switches transfer their electrical contacts when there is movement from the open or closed disc position during the first two revolutions of the handwheel.

NOTICE

The Model BFV-300/BFV-300C Grooved End Butterfly Valves described herein must be installed and maintained in compliance with this document, as well as with the applicable standards of the National Fire Protection Association, in addition to the standards of any other authorities having jurisdiction. Failure to do so may impair the performance of these devices.

The owner is responsible for maintaining their fire protection system and devices in proper operating condition. Contact the installing contractor or product manufacturer with any questions.

Technical Data

Approvals
UL Listed
FM Approved
CE Certified
VdS Approved
Russian Fire Certificate
CNPP R1 Listed–APSAD
Listed by California State Fire Marshall

Refer to Tables A, B and C for applicability.

All laboratory listings and approvals are for indoor and outdoor use.

Sizes
2–12 Inch (DN50–DN300)

UL/FM Maximum Working Pressure
2–8 Inch (DN50–DN200) . . . . 300 psi (20,7 bar)
10–12 Inch (DN250–DN300) . . 175 psi (12,1 bar)

VdS Maximum Working Pressure
2–8 Inch (DN50–DN200) . . . . 300 psi (20,7 bar)
10 Inch (DN250) . . . . . 232 psi (16,0 bar)
12 Inch (DN300) . . . . . 175 psi (12,1 bar)

Maximum Working Temperature
212°F (100°C) in accordance with UL 1091

Materials of Construction
Body . . . . . Ductile Iron
Body Coating . . . . . RILSAN PA11 Black
Disc . . . . . Ductile Iron
Disc Seal . . . . . EPDM Encapsulated
Upper & Lower Stem. . . . . Stainless Steel
Handwheel . . . . . Ductile Iron
(BFV-300 red painted; BFV-300C black painted)
Actuator, 2–6 Inch (DN50–DN150):
- IP 65, bronze traveling nut gearbox, ductile iron housing

Actuator, 8–12 Inch (DN200–DN300):
- IP 65, brass segmented gearbox, ductile iron housing

Silicone Free Model Availability
Silicone free models are available. Contact Tyco sales for information.

Tapping Bosses
Two factory-plugged NPT threaded tapping bosses in the valve body are located on the up- and downstream sides of the disc for connection to valve trim. Tapping boss sizes:

2–3 inch (DN50–DN80) . . . . . 3/8 NPT
4–12 inch (DN100–DN300) . . . . . 1/2 NPT

Control Valve Seat Leakage Class IEC 60534-4
CLASS VI (Type C) Control Valve Seat Leakage according to ANSI/FCI 70-2-2006 (ASME B16.104)

MODEL BFV-300 WITH OPEN SUPERVISORY SWITCHES

MODEL BFV-300C WITH CLOSED SUPERVISORY SWITCHES

1.7.8 On/Off Deluge Valve for Monitor Actuation

We offer a CLA-VAL On/off Solenoid Actuated Deluge Valve to serve the control facility of the monitors, please see specification below:-.

- **UL Listed / ULC Listed Main Valves - 3 - 12 inch sizes***
- **Fast Acting Solenoid Control**
- **Reliable Drip Tight Shut-off**
- **Simple Design, Proven Reliable**
- **Easy Installation & Maintenance**

The Cla-Val Model 134-05 Solenoid Control Valve is an on-off control valve which either opens or closes upon receiving an electrical signal to the solenoid pilot control. This valve consists of a 100G/2100G UL/ULC Listed Hytrol Main Valve, a three-way solenoid valve and an auxiliary pilot valve. This pilot control system alternately applies pressure to/or relieves pressure from the diaphragm chamber of the main valve. It is furnished either normally open (de-energize solenoid to open) or normally closed (energize solenoid to open).

Note: For seawater applications use 100GS/2100GS main valve

Please note that the UL and ULC Listings apply to the 100G/2100G Hytrol Main Valve equipped with the trim configuration of Model 134-05

Schematic Diagram

Item	Description
1	100G/2100G UL/ULC Listed Hytrol Main Valve
2	CS3 Solenoid Control
3	100-01 Hytrol Pilot Valve
4	X58C Restriction Orifice
5	X46A Flow Clean Strainer

Optional Features

Item	Description
C	CV Flow Control (closing)
F	Independent Operating Pressure
P	X141 Pressure Gauge

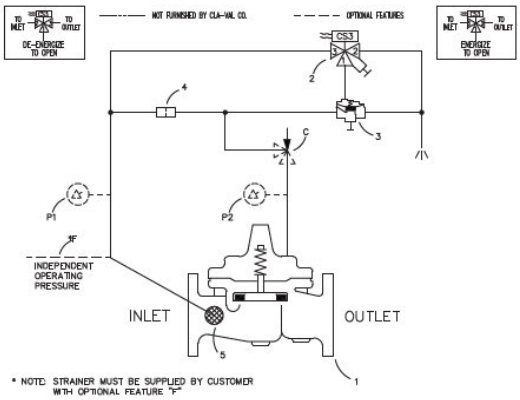

Specifications

SIZES
Globe: 3" - 12" flanged
Globe: 3" - 8" grooved
Angle: 3" - 12" flanged

END DETAILS
Ductile Iron 150 ANSI B16.42 flanged
Ductile Iron 300 grooved
Cast Steel 150 ANSI B16.5 flanged

PRESSURE RATINGS
150 class, 250 psi maximum (Ductile Iron)
150 class, 285 psi maximum (All other materials)
300 class, 300 psi maximum (All materials)

TEMPERATURE RANGE
Water: to 180° F. Max

Materials

Main valve body & cover:
Ductile Iron ASTM A-536*
Cast Steel ASTM A216-WCB*
Naval Bronze ASTM B61
Nickel Aluminum Bronze ASTM B148
Super Duplex Stainless Steel
Stainless Steel ASTM A743-CF-8M

Main valve trim:
Bronze / Stainless Steel

Pilot control system:
Cast Bronze ASTM B62
UL /ULC Listed 3" - 12"

Cover Capacity

Valve Size	Displacement
3"	.080 gal
4"	.169 gal
6"	.531 gal
8"	1.26 gal
10"	2.51 gal
12"	4.00 gal

Functional Data

Valve Size		Inches	3	4	6	8	10	12
		mm	80	100	150	200	250	300
C_V Factor	Globe Pattern	Gal./Min. (gpm)	115	200	440	770	1245	1725
		Litres/Sec. (l/s)	27.6	48	105.6	184.8	299	414
	Angle Pattern	Gal./Min. (gpm)	139	240	541	990	1575	2500*
		Litres/Sec. (l/s)	33.4	58	130	238	378	600

1.7.9: Trace Heating & Lagging

Trace Heating and Thermal Insulation

Our offer includes for the provision of trace heating and thermal insulation to the following areas:-

- // Trace heating and lagging of Pump Suction Pipework / Tank Infill Pipe
- // Trace heating and lagging of Manifold#1
- // Trace heating and lagging of Manifold#2
- // Trace heating and lagging of Manifold#3

All trace heat and lagging will be finished with aluminium casing.

1.8: Technical Qualifications for Fire Protection Systems

We would highlight below the following clarifications/qualifications to our proposal for your consideration:

- We include for providing the following access equipment:-
    - We include for MEWPS up to a working height of 18 metres where accessible at floor level.
- We do not include for the provision of fixed scaffolding for installing high level Fire Protection and Detection systems. Please note we do not include for fixed scaffolding in this offer, however we would advise that this will be required for installing the high level roof sprinklers to the Roof of the Waste Bunker / the Risers up onto the Hopper Floor / crane rail protection and also the control room window deluge.
- Thrust Blocks by others, therefore excluded from Tyco offer.
- Please note we have made no allowance for any means of manual firefighting (internal hosereels, hoseracks or external hydrants)
- We have not received a Piping Class document, therefore all pipework supplied will be to BS EN 10255 medium weight tube.
- We have not received a corrosion category document, therefore any pipework that is permanently wet will be painted, pipework that is dry will be Pre-galvanised
- We advise that velocities through pipes will comply with NFPA requirements.
- Please note our offer has been based on clear un-restricted access, in particular to install the Tipping Hall. Therefore we advise that our offer is based on clear access through the use of Booms and Scissor Lifts.
  Our tender is based on there being clear, obstruction free access at floor level within Tipping Hall Building and assumes that the sprinkler installation at main roof level would be carried out prior to the installation of any obstructing low level plant and equipment.
- Structural steel active fire protection systems excluded, our offer is based on the assumption that steelwork protection will be passive protection in the form of Intumescent paint or concrete encasement.
- We include 1 number control panel for the monitors.
- All normally dry systems will be supplied in galvanised finish, therefore not requiring painting. However the normally wet water filled pipework will be supplied painted red oxide finish only.
- Trace Heating and Lagging is included, and will be aluminium clad finish
- We do not include for providing an access platform for the monitors or access ladders, by others.
- Our offer is based upon the requirements of the enquiry documents received in Section 1 of this tender, any documents that are referenced therein that have not been provided to Tyco are deemed to be not applicable for the Fire Fighting Scope of works.
- We have assumed that the water supply being provided to be clean and free from any suspended fibrous, or organic matter and confirm that materials have been selected on this basis. We have not included for any water strainers for the firefighting systems.
- We exclude the supply of spare parts for the purposes of this tender.
- We have not included for protection of the floor area underneath the boilers, or for protection of any associated oil filled equipment on the basis that all hydraulic equipment should use a listed fire resistant fluid and also that catch trays should be fitted below each oil burner to retain any leaking oil to within the fire protected area and prevent oil from running down boiler fronts and igniting in non sprinklered areas below.
- Portable Fire Fixed extinguishers are excluded at this stage.
- We exclude Seismic Calculations and additional measures if required shall be subject to a contract variation.
- We exclude lightning protection.

- Pumphouse GRP enclosure building has been included, which will be one hour fire rated.
- We have made no allowance to carry out a DSEAR Assessment or Hazop Study; we assume that this will be carried out by others, attendance at HAZOP meetings can be provided however.
- Air supplies to Tyco equipment (i.e. Thermal Cameras / Valvesets etc.) to be provided from plant air and located within 1m of Tyco equipment
- We have made no allowance for special materials suitable for corrosive atmospheres.
- Any installation using Rope Access Solutions or similar is also excluded from Tyco offer.
- We include a full time site supervisor to manage the site activities / attend meetings at site and liase with the customer and Tyco Project Management team.
- Our offer has been based on the Project Engineer visiting site on a bi-weekly basis for a period of 1-2 days each visit, therefore we confirm engineer will not be based on site full time.
- Pressure testing to be undertaken during normal working hours, between 0800 – 1800
- We have made no allowance for special site labour uplifts, we have not been advised of a special project Labour agreement such as NAECI, therefore this is excluded. If there is a special project labour agreement we should be aware of, please advise and we will include.
- Fire stopping & making good is excluded from Tyco scope.
- Builderswork (inc. holes / concrete plinths etc.) is excluded, these requirements are to be taken from Tyco piping GA drawings.
- All earthing of pipework and equipment is excluded by Tyco.
- We assume that the fire protection water supplies are clean, fresh, cold water, Tyco have made no allowance for special materials, filters or booster pump.
- Tyco to clean their areas and remove any rubbish to a central area daily, to be removed from site by client.
- Welfare facilities are assumed to be provided by others, Tyco make no allowance for this. We have included for necessary Secure Stores for security of valuable items required for carrying out our works, however the washrooms, toilets , general welfare facilities and parking is to be provided free of charge (By Others).
- Lay down areas will be provided by site cabins in the main compound, however where possible we would require designated laydown areas local to the work faces.
- We have assumed that we shall be provided, free of charge, with electrical power for electrically operated tools and for system testing as required.
- We exclude signage other than labelling of the Fire Fighting Equipment.
- We have included for safe area classification equipment only.
- Drain locations are to be provided by others locally to each sprinkler / deluge control station. We have included for drain pipework to local drain positions (within 6 M). Drains should be suitably sized for removal of water (By Others).
- All proprietary items (valves etc.) will be supplied in the manufactures standard paint finish. We have made no allowance for any special paint finishes.
- Our tender does not include any Plumbing and drainage works or removal of water. Following the initial proving tests, regular tests would have to be carried out at the installation control valves. It is assumed that if required, a suitable drain would be provided by others to accommodate the water discharged during both the initial and subsequent tests.
- We have included for providing earth connections on our provided equipment, however we do not include for any connection to the site earthing system or continuity testing and any additional requirements thereof etc.
- Our tender is based on working during normal working hours and any work that we have to carry out at the client's request outside of the normal working period will be chargeable. Likewise, any work that we cannot carry out during our normal working hours due to site conditions and circumstances outside of our control, will be similarly charged as an extra to our contract.

- Our tender is based upon clear unrestricted access to works areas in line with an agreed programme of works without obstruction, any loss of productivity as a result of disruption or non-productive time due to circumstances beyond Tyco's control, will be charged as an extra to our contract. Tyco shall also be granted an extension of time in the contract programme at least equal to any period of delay.

- It is assumed that our work on site would be continuous, we have not included for any costs associated with any breaks in continuity. Costs associated with demobilisations and remobilisations and cost associated with acceleration of contract programme if requested that we would not have otherwise incurred should we not have been delayed, would be charged as an extra to contract.

- We have assumed that we shall be provided, free of charge, with water for testing.

/ SECTION 2 – FIRE ALARM & DETECTION SPECIFICATION /

2.0: Basis of proposal

We have based our proposals on the following tender documents:

// Chemcycle Specification Rev2.1 (003)
// HPM-18782-PS-PL-001_A1 (SHEET 01 OF 02) (002)

2.1: Design Basis

Our designs have been based upon the information contained within the enquiry documents as listed in Section 2.0 of our tender.

We have designed this system in line with the requirements of BS5839 Part 1:2017 Category P1.

Detailed designs would be prepared using our in-house Computer Aided Design Facilities and shall be in accordance with the following:-

/ Standards /
• BS5839-1 2017 **Fire detection and fire alarm systems for buildings** – Part 1: Code of practice for design, installation, commissioning and maintenance of systems in non-domestic premises

Preliminary design drawings would be submitted to the client and/or their approving authority for comment or formal approval, prior to commencing work. Design drawings would be based upon information provided by the client and we have not included for carrying out any detailed site surveys at this stage.

2.2: Fire Detection Equipment Specification

The system has been designed as an extension to the existing open protocol Apollo XP95 Detection System. A new panel will be added to the network to incorporate the new devices required to actuate the mechanical fire protection. The reasons for adding a new panel are two-fold.

Firstly it will ensure that the protection actuation is not polluted by any possible errors/faults on the existing system. It also means that installation can be quicker and more straightforward as there should be minimal modification to the existing systems.

There will be some modification works required to the existing system within the hardstanding extension. In this area additional sounders and call points will be installed and connected to the existing loops and sounder circuits.

Note: A full survey may be required to ascertain the condition of the existing system. While it is a relatively new installation the site has been unoccupied for an extended period of time. Tests may have to be carried out to ensure that the system is not compromised before any works take place.

We have included an optional cost for this survey but please note that further costs, unaccounted for within this proposal, may arise from the survey.

2.3: Automatic Fire Detection by Area

2.3.1: Bin Storage, Shredders & Cleaning Areas

The Bin Processing Areas are protected by the following Fire Detection & devices:

// Fire Alarm Control Panel In IP65 Enclosure
// Triple IR Flame Detection to the Shredders and Storage/Cleaning Area
// Manual Call Points and Sounder/Beacons within the Building Extension

Bin Processing Areas detection will be provided in the form of Triple IR Flame Detection. This detection will cover the Shredders, Bulky Shredders, Bin Cleaning and the Dirty/Clean Storage areas.

All equipment within the process area, or mounted externally, will have an environmental protection rating of IP65.

We have included for the above detection to the areas listed along with Manual Alarm Call Points, and Audible Alarms with visual Beacons where required.

/ Designation /	/ Description /
Design Basis	BS5839 – 1 2017
Automatic Detection offered	Triple IR Flame Detection.
Design Category	P1/M
Environmental Protection Rating	Minimum IP65

2.3.2: Pyrolysis Boiler and WHRU

The Bin Processing Areas are protected by the following Fire Detection & devices:

// Triple IR Flame Detection

Detection to the Pyrolysis Boiler and WHRU will be provided in the form of Triple IR Flame Detection

All equipment within the process area, or mounted externally, will have an environmental protection rating of IP65.

/ Designation /	/ Description /
Design Basis	BS5839 – 1 2017
Automatic Detection offered	Triple IR Flame Detection.
Design Category	P1/M
Environmental Protection Rating	Minimum IP65

2.3.3: Conveyors and Material Recovery Plant

MRF Areas and Conveyors are protected by the following Fire Detection & devices:

// Triple IR Flame Detection to the Dryer and Metal Separator
// Black Body IR Transit Flame Detection to the Conveyors
// Linear Heat Detection to the Conveyor Bearings

The Dryer and Metal Separator plant will be protected with Triple IR Flame Detection which will be utilised to actuate the mechanical fire protection deluge systems.

Each conveyor will be protected by Black Body IR Transit Detectors mounted within the conveyor monitoring the waste pile for IR heat emission. These detector ensure that a moving fire on the conveyor belt can be detected.

Note: The method of mounting the detectors will need to be discussed with the plant provider. Specialised hoods may be needed to guarantee the required 1m clearance from the top of the waste pile to the detector. The supply or fabrication of specialist conveyor hoods and mounting brackets is assumed to be in scope of the plant/conveyor provider.

Each conveyor will also be provided with Linear Heat Detection to monitor the bearings for heat generation from fallen combusted material or friction fire from bearings becoming stuck.

All equipment within the process area, or mounted externally, will have an environmental protection rating of IP65.

/ Designation /	/ Description /
Design Basis	BS5839 – 1 2017
Automatic Detection offered	Triple IR Flame Detection, Black Body IR Transit Flame Detection, Linear Heat Detection
Design Category	P1/M
Environmental Protection Rating	Minimum IP65

2.3.4: RDF Bunker/Storage

RDF Storage Area will protected by the following Fire Detection & devices:

// Static Thermal IR Cameras

To cover the Storage Area we propose the installation of a Fixed Thermal Imaging Hotspot Detection Cameras to each bay. At the time of this proposal it has been assumed that there will be three RDF storage bays, each provided with two Static Thermal Cameras to ensure there are no blind spots.

In the Control Room a PC will be installed to act as the central monitoring point of the Bunker and Receiving Hall thermal cameras. On an alarm condition the system will activate a beacon/sounder drawing the control room operator's attention. The cameras can them be monitored in conjunction with the existing site CCTV to ascertain if it is a true fire condition.

Note: Please note that while Thermal IR Cameras as the preferred detection method of CHUBB for Waste Storage areas they are not recognised under EN54 or BS5839 Part 1:2017

All equipment within the process area, or mounted externally, will have an environmental protection rating of IP65.

/ Designation /	/ Description /
Design Basis	N/A – CHUBB Preference
Automatic Detection offered	Static Thermal IR Cameras
Design Category	N/A
Environmental Protection Rating	Minimum IP65

2.4: Equipment Specification

2.4.1: Advanced Electronics Mx-5400 Fire Alarm Control Panel

The MxPro 5 series control panels are supplied with a single loop driver card, 2 on board sounder circuits, 20 programmable zonal LEDs with slide-in labels, and 25 system LEDs for information purposes. There are also 4 programmable function buttons with LED indication for confirmation of operation.

The control panel consists of the latest dual flash-based microprocessor technology combined with a high resolution, high contrast, graphical LCD display and tactile keypad providing a simple 'select & click' programming aid for engineer configuration and end user operation.

Powerful cause-and-effect programming coupled with dynamic zoning, and enhanced trace diagnostics makes the panel suitable for a wide range of site applications from small to large complex multi-area systems. Fully programmable on-site via the on-board alphanumeric keypad, or PC-NeT Configuration Software.

Features

// 20 programmable Zonal / 25 System LEDs.
// Apollo, Argus Vega, Hochiki & Nittan Evolution* protocol support.
// Dedicated USB & RS232 serial port for direct PC or modem connection.
// Integral P-Bus for system expansion via available option cards.
// Ad-NeT peer-to-peer network with up to 2000 zones
// Approved to BS EN54 part 2, 4 and 13.

Technical Specification

Mains Supply:	200 - 240v 47-63 Hz AC (+10%, -15% tolerance) 1.0A Max
Battery Capacity:	24v, 7 Ah internal (max)
Enclosure / Colour:	Steel IP30 / RAL7035
Cable Entry (20mm):	13 x top & 8 x rear
Size H x W x D mm:	340 x 340 x 85
Approvals:	EN 54-2:1998, EN 54-4:1998 & EN 54-13:2005

2.4.2: Apollo XP95 Outdoor Manual Call Point

The new Apollo XP95 IP67 EN54-11:2001 compliant Manual Call Point (MCP) is based on the KAC conventional MCP range. It is electronically and mechanically backward compatible with previous Apollo call points based on KAC's World Series product.

The address of each call point is set at the commissioning stage by means of a seven-segment DIL switch.

A single bi-coloured alarm LED is provided on the call point. This LED is controlled, independently of the call point, by the control panel. The red LED is lit when the call point has been activated. An amber/yellow LED indicates a fault.

Features

// EN 54-11 approved (EN 54-17 approved for Isolator version)
// A unique, ergonomically designed key for resetting and front cover removal
// Captive screws
// Reports an alarm in under 0.2 seconds
// Built in isolator

Technical Specification

Power-Up Surge Current:	1mA
Maximum Power-Up Time:	1 second
Quiescent Current:	100µA
Alarm Current (At 24 Volts):	4mA
Humidity:	0% to 95% (no condensation or icing)
Operating Temperature:	-30 to 60°C
IP Rating Value:	IP67
Weight:	325g
Dimensions:	114mm x 114mm x 74mm (LxWxD)
Detection Principle:	Operation of a switch

2.4.3: Apollo Triple Infra-Red IR³ Flame Detector

The Apollo triple Infra-Red (IR³) Flame Detector is designed to protect areas where open fires may be expected and detects almost all flames, including hydrocarbon fires with 4.3µm emissions through to invisible fires such as hydrogen.

The IR³ Flame Detector is sensitive to flickering, low frequency (1- 15Hz) infra-red radiation emitted by flames during combustion even if the lens is contaminated by a layer of oil, dust, water, vapor or ice.

This detector has three IR sensors which respond to different IR wavelengths in order to discriminate between flames and spurious sources of radiation. False alarms from flickering sunlight are avoided by a combination of filters and signal processing techniques.

Features

// Excellent immunity to false sources
// Tolerant of fumes, vapors, dust and mist
// Suitable for indoor and outdoor areas
// Unaffected by convection currents, draughts or wind
// Proven response to multiple fuel types
// Multi-spectrum detection
// Selectable output options
// Selectable response speed
// Selectable sensitivity levels
// Built in auto and manual test
// Low current consumption
// Fast response to fire

Technical Specification

Dimensions:	142(H) x 108(W) x 82(D) mm
Weight:	2kg
Cable Gland Entries:	2 x 20mm
Wiring:	1.0 to 4.0mm²
Supply Voltage:	14 to 30vDC
Test Signal Voltage:	14 to 30vDC
Voltage:	50vDC Max
Power:	30W Max
Operating Temperature:	-10°C to +55°C
Storage Temperature:	-20°C to +65°C
Relative Humidity:	95% Non-condensing
IP Rating:	IP65

2.4.4: Patol High Temperature Transit Black Body Emissions / Flame Detector

The High Temperature Transit Flame Sensor monitors high temperature materials (up to 240° on highest sensitivity), being transported on conveyor systems at speeds of between 0.5 and 6m/s, and triggers as the material reaches the ember or flame condition.

The sensor employs enhanced infra-red monitoring technology that analysis the levels of IR emission in the narrow band of 4.2-4.7µm. As the sensor is tuned to this band it is “solar blind” meaning the “background” and “transient” IR spectra are discriminated. This provides enhanced false alarm immunity.

The 5610 is specifically designed for hazardous areas and is IECEx / ATEX approved for Zones 1, 2 & 21, 22.
Air purging from a compressed air feed is used to maintain a lens cleaning system that ensures the prevention of dust settling on the sensor window.

Features

// Detection of ember and flame of high Temperature product.
// Air purged system for dusty environments with air pressure monitoring.
// Isolated Detectors for Maximum reliability.
// Single / Coincidence voting output
// Timed auto reset / coincidence analyser circuit
// Tuned response — solar blind
// Voting Logic & Latching options
// Alarm & Trip Functions

Technical Specifications

Detectors:	2 off Isolated Sensors.
Spectral Filter:	4.2 - 4.7 µm (narrow band)
Sensitivity:	4 Levels
Transit Speed:	0.5 to 6 m/s
Sensor Head:	3kg
Material:	Aluminium
IP Rating:	IP66
Supply Voltage:	20-30 vDC
Supply Current:	Relay Mode: 11mA Quiescent 26mA Max/Full Alarm
Temperature:	-20°C to +60°C
Outputs:	Alarm/Trip Contact 2 Pole C/O Fault Contact 1 Pole C/O Rating: 30 vDC - 500 mA
Purge Air:	Input Fitting: 10mm Compressed Air Hose Adapter Pressure: 2.5 psi to 10 psi Typical Delivery: 30 litres/min

2.4.5: Patol Analogue Linear Heat Detector Controller

The module is designed to monitor a zonal length of Analogue Cable for both an elevated temperature (Fire) condition, and Fault Status (Open & Short Circuit). It operates in conjunction with a single core coaxial cable and an end of line (EOL) terminator. The module provides early warning of hot spots and fire conditions on short sections of the overall zone length.

Maximum Zone length for Analogue Linear Heat Detection Cable is 500m when connected to this module. It is designed so that it can be configured to operate in two wire mode that emulates the operation of conventional heat detectors. Allowing for direct interfacing with the Fire Control panels trigger circuits.

Signaling of Fire and Fault Status by means of Volt Free Contacts may also occur when a separate power supply is used. The modular form of the unit enables it to be provided in a variety of discrete housings and readily integrated into special control panels.

Features

// SIL 2 Certified
// Adjustable Alarm set point
// LED Indication of Fire, Fault and Supply Status
// Analogue address interface, Line powered configurable
// Fault Monitoring for open & short circuits
// Selectable Latching / Auto reset operation
// VFC outputs for Fire & Fault conditions
// Operable from two wire fire panel trigger circuits

Technical Specification

Dimensions (WHD):	125mm x 175mm x 75mm
Weight:	0.85kg
IP Rating:	IP66
Material:	Polycarbonate
Supply Voltage:	20-30 VDC (Relay mode)
Current Fire:	< 10 mA (with fire relay)
Current Fault:	< 300 µA Relay Contacts: 1 A @ 24 VDC / 120 VAC

2.4.6: Wall Mounted High Output Sounder/Beacon Units

The Nexus 110 is a high output, low current consumption sounder beacon designed for fire and industrial applications. Connections are made to the base during the initial wiring phase which results in faster and more reliable installation. In addition, the head is fixed by quarter turn fasteners avoiding the need to screw up four individual screws thus enabling faster installation and accurate seal compression for weatherproofing. The Nexus Sounder Beacon is available with a high output xenon beacon. The combination of a powerful sounder and high output beacon ensures a very effective audio-visual signal.

Features

// High sound output: 113dB (max); 110dB (typical)
// 5J Xenon Beacon
// Quarter turn fasteners for ease of installation
// First-fix, wire to base technology
// IP66 rated
// Three alarm stages
// Volume control for greater flexibility - 20dB
// 64 tones
// Separate connections for sounder & beacon

Technical Specification

Power-Up Surge Current:	28-115mA
Maximum Power-Up Time:	<1 second
Quiescent Current:	330µA
Supply Voltage (Min):	18V dc
Supply Voltage (Max):	28V dc
Supply Voltage (Vmin-Vmax):	18 to 28V dc
Operating Temperature:	-25 to 70°C
IP Rating Value:	IP66
Weight:	1200g
Colour:	Red
Product Dimensions:	213.5mm x 166.3mm x 149.5mm (LxWxD)

2.4.7: Focus 2000 Fire Guardian Thermal Imaging Cameras

The Fire Guardian IR 'hot spot' fire detection system is designed to provide thermal surveillance in environments where there is the ever present risk of fire. The system utilizes state-of-the art thermal cameras that are sensitive to infrared energy, temperature changes less than 1°C can be detected, thus enabling early warning of any potential over heating or fire risk.

Fire Guardian IR provides alarm outputs on exceeding pre-set temperatures. It includes many unique design features that ensure optimum performance under service conditions. Using a high resolution infrared detector to locate hot spots, the PTZ system also incorporates a high definition visual camera to aid scene interpretation.

Example Static Camera

Features

// State-of-the-art FPA thermal technology
// Detect hot spots before they become fires
// Accurate temperature discrimination
// Detect Body Temperatures
// Site programmable
// 24 hour fire / over temperature detection
// IP66/67 weather proof enclosures
// Displays precise temperature measurement for each single pixel point within a thermal video image (76,800 pixels)
// The preset temperature alarm levels are user definable
// Detect origins of potential self-combustion prior to the flashpoint temperature being reached
// Prevent fires erupting
// Provide clear views through smoke
// Allows safe temperature measurement of a fire source
// Integrates into facility fire detection systems

The Fire Guardian has a moveable area mode within which the maximum temperature is automatically displayed. This makes it quick and easy to collect pertinent data like the hot spots within the field of view.

Thermal analysis is carried out within the thermal camera in real time and appropriate digital output signals are provided to indicate temperature status. Maximum temperature within the scene is displayed continuously on display screen in real time.

Alarm temperature thresholds can be set prior to installation or during commissioning. Alarm temperatures should be set above local ambient temperatures. The Alarm outputs providing volt free contacts are hard wired to relays, which in turn when activated will turn on the water cannon.

The Fire Guardian is supplied with a wide 25° field of view. Motor focus is provided and focus is controlled from the control screen in the IR Monitor software supplied as part of the overall package.

The Fire Guardian is a real-time thermal imaging camera system and scans at full 30Hz or 30 images a second. This means images can be recorded while the camera is moving without image distortion or smear. The video format provided is CCIR PAL and optionally NTSC.

The Fire Guardian is suitable for use in harsh environments with an industrial IP65 to IP66 enclosure rating (depending on the model). This means the system is highly resistant to both dust/soot contaminations. The Fire Guardian is fitted with an air purge Knife which will keep the thermal window clean, thus ensuring that the thermal detector is providing the correct temperature measurement under all conditions. **Subsequently a permanent clean air supply will be required for each camera to maintain effective detection and to protect the lens from dust and contaminants.**

The Fire Guardian has an operational temperature range from –15°C to +50°C this allows use of the equipment in harsh environments.

The Fire Guardian is rated for Shock, operational 25G, IEC 68-2-29, and Vibration, operational, 2G, IEC 68-2-6

Example Fire Guardian Schematic

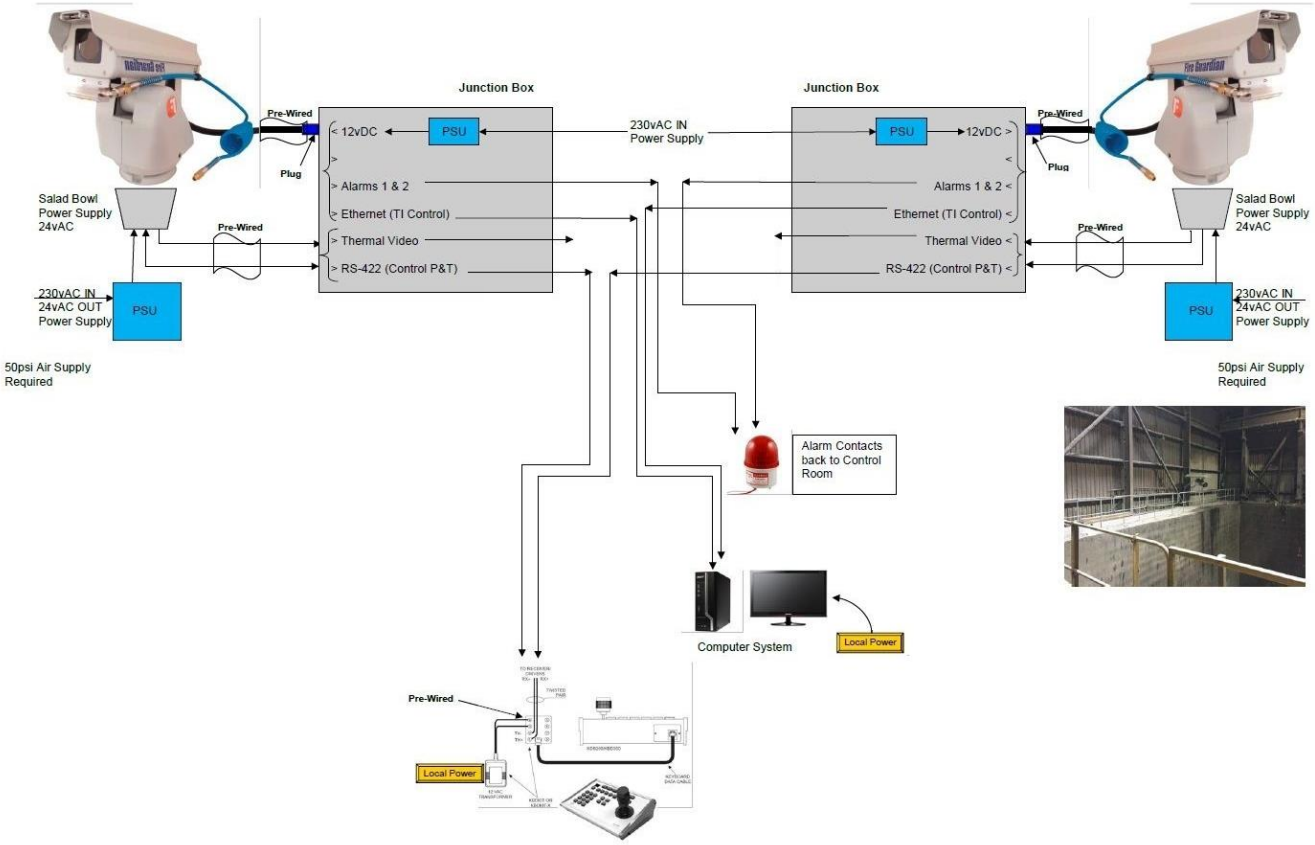

Each camera is wired back to a locally mounted junction box and from this box to the main control cabinet within the CCR. System display and control is provided within the Operators Control Cabinet and the system is also linked to the fire detection system to provide audible and visual alarm operation if required.

2.5: Fire Detection and Alarms Plant Interfacing

We have allowed for the following Interfaces for Plant Control and Interfacing to other Systems:

// 6x Output Signals for Transformer Shutdown

We have not allowed for any cabling to third party interface connections.

Fire Fighting Protection System Interfacing

The Fire Detection and Alarm System will interact with the Fire Fighting Protection System in the form of monitoring Inputs and providing Outputs to operate systems. These generally will consist of:

// Monitoring of Low Air, Fire Fighting Isolation Valve Switches and Operational Flow Switches for Deluge Systems

We have allowed for all interfacing and cabling between the Fire Detection System and the Fire Protection Systems.

2.6: System Cabling

All wiring of the Fire Detection System will be carried out in Enhanced Zero Halogen, Low Smoke (OHLS®) cable, maintaining circuit integrity when exposed to fire, meeting the Enhanced Category of BS 5839-1:201 manufactured to BS7629-1. Tested and approved by LPCB.

This cable should be specially designed to meet the Enhanced requirements detailed in BS5839-1:2017, Clause 26.2e. It therefore meets the PH120 class, and additionally meets the requirements for integrated water spray and mechanical shock also described in Clause 26.2e, and detailed in BS 8434 Part 2:2003:

// 120 mins - fire and mechanical impact, followed by
// 120 mins - fire, mechanical impact and water

<u>Standards Achieved / Performance Characteristics</u>

Circuit integrity: BS 5839-1:2017 Clause 26.2e Enhanced, BS 8434-2:2003, BSEN 50200 PH120, BS 6387 C, W & Z.
Flame propagation: BS 4066-3, IEC 60332-3-24, EN 50266-2-4
Acid gas emission: BS 6425-1/IEC 60754-1/EN50267-2-1: <0.5% acid gas – EN 50267-2-2/IEC 60754-2
Smoke emission: BS 7622/IEC 61034-1/EN 50268-1

2.7: Audible / Visual Alarms

All audible alarms offered are approved to EN54-3 and Visual Alarms to EN54-23, wall mounted audible and visual alarms are non-addressable devices controlled from conventional sounder circuits. To significantly reduce the number of remote power supply requirements, the majority of audible / visual alarms would be powered from sounder circuits at the control panel.

We exclude compliance to EN54-23 as the design and layout of VAD devices to meet the VAD Illumination Characteristics to obtain 0.4 lux as referenced within EN54-23 cannot be estimated or accurately designed until detailed design stage where final locations of equipment are defined. Should the quantity estimated be insufficient, or should there be any deficiency in the audibility or lux levels obtained upon completion of the installation and the subsequent occupation and operation of the premises due to attenuation by decoration, furnishing, stored goods etc., or due to a level of ambient noise greater than that stated or assumed, or due to requirements in excess of BS5839 Part 1 that may result in a requirement for extra audible alarm units, then these units will be provided as a chargeable extra to any contract that may result from this tender.

2.8 Technical Qualifications, Clarifications and Exclusions

// An allowance for primary and secondary containment has been included within this budget.

// A full survey may be required to ascertain the condition of the existing system. While it is a relatively new installation the site has been unoccupied for an extended period of time. Tests may have to be carried out to ensure that the system is not compromised before any works take place. We have included an optional cost for this survey but please note that further cost, unaccounted for within this proposal, may arise from the survey.

// No allowance has been made for connection to any third party fire detection systems or BMS systems. These links can be provided but further information would be required.

// All allowances for interfacing is based on the supplied layout drawings and specifications, we have not allowed for interfacing to plant not identified as being included due to the information available at this stage.

// Factory acceptance testing of the equipment detailed within this proposal has not been included.

// Classroom based training has not been included within this proposal.

// A UPS is not included within our proposal. All associated power supplies which form part of the fire detection & alarm system are approved to the relevant part(s) of EN54 as recommended in BS5839-1:2017 and are supplied with sufficient standby battery capacity to satisfy BS5839-1:2017. For the purposes of this proposal standby capacity has been designed for 24hrs in standby and 30mins in full alarm.

// At this stage the findings from a DSEAR/ATEX assessment has not been provided. As such, all equipment within this proposal is not ATEX rated.

// We do not include any form of Fire Risk Assessment and/or assessment for requirements under the Disability Discrimination Act. At this stage no specific DDA requirements have been detailed, therefore this proposal excludes any DDA equipment.

// The Fire Detection & Alarm system utilises an addressable communications loop which operates at a voltage greater than 24V and less than 50V, and as such are classified at ELV circuits.

// The Fire Detection & Alarm equipment has integral isolation protection to enable circuit integrity to satisfy the recommendations of BS5839-1:2017.

// The field devices (excluding control panels and/or power supply units) included within this proposal have a minimum Ingress Protection rating of IP21D.

// Equipment shall be constructed of standard manufacturers material as per industry standards

// All cabling included within our proposal utilises 'Enhanced' fire-resistant cable as per the recommendations of BS5839-1:2017 which provides 120mins fire resistance.

// We have included for all cable fixings to be Steel, Cable Ties will be Stainless Steel Cable ties.

// We exclude the installation of specialist fire stopping, i.e. Acoustic Sleeving, Intumescent Bags or cable tray over covers. We have allowed for fire stopping in the form of fire rated foam/mastic.

// We exclude the provision of electrical power supplies to Fire Detection Control Equipment or Field Equipment, where single phase supplies are required they should be located immediately adjacent to the associated equipment via fused un-switched isolators.

// We exclude the provision of Working Platforms for future maintenance of Fire Detection Equipment.

// We have not allowed the provision of 2 Years Operational Spares, this can be provided as a separate price.

// We exclude work outside normal hours.

// We exclude removal and disposal of waste.

3.0: Basis of proposal

We have based our proposals on the following tender documents:

// Chemcycle Specification Rev2.1 (003)
// HPM-18782-PS-PL-001_A1 (SHEET 01 OF 02) (002)

3.1: Design Basis

The Gas Suppression system outlined below has been designed generally in accordance with:

/ Designation /	/ Description /
BS EN 15004-1:2008	Fixed firefighting systems. Gas extinguishing systems. Design, installation and maintenance
BS EN 15004-10:2008	Fixed firefighting systems. Gas extinguishing systems. Physical properties and system design of gas extinguishing systems for IG-541 extinguishant
BS 6266:2011	Fire protection for electronic equipment installations. Code of practice

3.2: Gaseous Inergen System Overview

We include for the design, supply, install, test and commissioning of the Inergen Central Bank iFlow Fire Suppression Systems complete with the associated Fire Alarm and Detection Systems for the following areas. Voids have not been allowed for unless indicated:

Stand Alone Systems

/ Room /	Total Vol (m3)
Gas Powered Engine Enclosure x 6	244m³ (Each Enclosure)

3.3: Description & Applications of Inergen

Inergen (IG541) is a clean agent suitable for total flood applications

Inergen is composed entirely of naturally occurring gases that are already present in the atmosphere; there are no environmental restrictions on its use. Inergen has zero Ozone Depletion Potential (ODP), no Global Warming Potential (GWP) and no atmospheric lifetime. Inergen does not form decomposition products in a fire.

Inergen is stored as mixtures of three gases - Nitrogen, Argon and Carbon Dioxide - are mixed in the following proportions:

Nitrogen 52%
Argon 40%
Carbon Dioxide 8%

Inergen is effective on all common types of fires (Class A, B and C). Inergen systems are designed to extinguish fires involving flammable liquids, gases and electrical equipment. The systems are designed to be total flooding and consist of a fixed supply of Inergen connected to a piping system with nozzles to direct the agent into an enclosed hazard. Inergen extinguishes fires by lowering the oxygen content below the level that supports combustion. In simple terms, if the oxygen content of the atmosphere is reduced to a level below 15%, most ordinary combustibles will not burn.

Typically an Inergen system will reduce the oxygen content to approximately 12.5% whilst increasing the carbon dioxide content to around 3%. The increase in carbon dioxide content increases the body's ability to absorb oxygen, thus allowing the body to compensate for the lower oxygen content. Since Inergen is stored as a gas, it discharges as an invisible gas, allowing people to safely exit a protected space without obscured vision. Inergen Systems are particularly valuable in extinguishing fires in enclosures containing hazards or equipment where a clean, electrically non-conductive medium is essential.

The complete Inergen system as installed by Tyco Fire & Integrated Solutions is CE marked in accordance with the requirements of the European Press Equipment Directive (PED); this signifies that all components and assemblies meet the safety Criteria as set out in the Directive.

Unlike other Systems, Inergen does not form a fog when it is discharged. Therefore, exits remain fully visible.

Inergen is stored as a gas, so there is no condensation or thermal shock when it is discharged into the protected area.

Because the final Inergen /air mixture within a room has approximately the same density as air, suppression concentrations are held longer than traditional fire protection gases.

When released into a room, Inergen extinguishes fire by diluting the oxygen level to between 12% and 14%. Unlike any other inert agent Inergen contains a small amount of CO^2 to compensate for the reduction in the Oxygen level.

3.4: Proposed System and Design

We have based our design calculations for the Inergen system to protect the following rooms as described in Section 3.3.

Gas Powered Engine #1
Gas Powered Engine #2
Gas Powered Engine #3
Gas Powered Engine #4
Gas Powered Engine #5
Gas Powered Engine #6

Note: We have based this proposal on each engine enclosure being no more than 14m x 4m x 4m (L x W x H)

The Inergen systems will comprise of stand-alone systems with the cylinders being located external to each Engine in GRP Enclosures.

From our preliminary calculations, each system would require a total number of 6 x 80L 300 bar cylinders. The systems will be capable of providing an 'Initial' discharge only.

Note: It may be possible, once the final equipment layouts are released, to engineer the system as a "Central Bank" arrangement. This would mean only one set of cylinders is required, greatly reducing the installation costs.

Tyco Fire & Integrated Solutions will design the distribution pipework with an approved computer-based package to ensure that the extinguishing agent is released correctly into the protected risk area.

Special consideration will be given to the design & layout of the Inergen pipework to ensure that it does not clash with any objects located at ceiling level.

The automatic point detectors within each risk will be connected to a local fire control and suppression panel which will be located externally to each area in IP65 enclosures. Each fire & suppression controller will incorporate mode control to select between Automatic and Manual operation of the extinguishing system. At the front of each Fire & Suppression Control Panel, there will be an electrical manual release which will facilitate the electrical actuation of the associated suppression system if required.

Each panel will incorporate an integral addressable interface unit to enable connection and subsequent status monitoring onto the site wide addressable system.

3.5: Integrity Test

All areas with gaseous fire protection systems must be checked to ensure they are sufficiently sealed to maintain the required gas hold time. It is equally important to quantify the natural room leakage to prevent any over pressurisation.

Therefore, this quotation includes to carry out a single test for each room to verify integrity in accordance with the requirements of BS EN 15004-1: 2008. This is calculated by giving the area a positive pressure and this pressure is monitored, the fan speed and pressure is also monitored and from the difference between the fan pressure and room pressure, the leakage is calculated by using a computer programme. Prior to the test the following points need to be adhered to where applicable: -

Air conditioning, Dampers, Louvers or Smoke Curtains should be closed.

3.6: Pressure Relief Dampers (PRD)

We have included within our price for the free issue of Pressure Relief Dampers as part of this tender. The venting area calculated for each area in this proposal assumes that there is no natural leakage and that the room strength is 250 Pascal's, the free vent area must be ventilated / ducted directly to atmosphere to avoid cascade ventilation (By Others). Cascade Ventilation would necessitate multiple Pressure Relief Dampers **and this has not been allowed for.**

The final free vent area for each risk can only be calculated after natural leakage has been established following Room Integrity Testing and a full hydraulic calculation has been carried out to determine the actual discharge time of each system.

3.7: Ventilation

In accordance with the recommendations of the above standards, the following provisions should be made upon operation of the system and prior to an Inergen discharge:

1. Shut down any Air conditioning plant associated with the protected area.
2. Louvres should be motorised to close.
3. Smoke curtains to be arranged to release.
4. Ducting should have electrically operated dampers.

Subject to any requirements of the Authorities having jurisdiction at this site, arrangements for forced post-discharge ventilation may be required to extract the area of toxic smoke and other fire products in the event of a fire.

At this stage we have not included for any 'forced' post-discharge ventilation.

3.8: Exit Doors

We would recommend that all exit doors from the protected area open outwards and have self-closing devices fitted.

3.9: Inergen Entrance Warning Signs

Inergen entrance warning signs would be displayed at each entrance to the protected area.

3.10: Inergen Area Detection System Design

Each 'risk' area will be provided with a dedicated 'wall mounted' Gas Extinguishing Control Panel (GECP). Each GECP will be provided with 'sealed' lead acid batteries for the system standby.

Each GECP will be located adjacent to the main entrance door for each 'risk' area and also provided a 'manual' release break glass unit.

A Status Indicator Unit will be installed at any secondary entrances to the 'risk' areas.

The fire detection and alarm system for each 'risk' area will incorporate the following types of fire detection and alarm devices, selected to be appropriate for the risk being protected:-

a) Point Type Optical Smoke Detectors c/w Base (Conventional Type)
b) Industrial Type Heat Probe Detectors (Conventional Type)
c) Remote LED Indicator Unit (Floor / Ceiling Void Detectors)
d) Combined Sounder Beacon with Red Lens (1st Stage Alarm)
e) 6" Alarm Bell (2nd Stage Alarm)
f) Beacon (to be mounted above each entrance to the 'risk area')

The purpose of the fire detection and alarm system is to warn operatives in the immediate vicinity of the presence of fire by audible and visual signals and to alert personnel of the location of the fire. Such signals may be generated by automatic detectors, or by the action of personnel on discovering a fire in its incipient stages.

The fire detection system is based upon conventional devices that will be wired on a 'double knock' circuit.
Each 'risk' area will be provided with a mixture of Optical and Ionisation Point Type Smoke Detectors.

Alarm signals generated from the smoke detection will be utilised to actuate the Inergen® gas extinguishing system. The 'double knock' configuration will reduce the risk of any spurious discharges of the gas system and operate as follows: -

1) In the event of fire being sensed by a smoke detector within the module, a 'first stage' alarm condition would be indicated.

At this point a combined sounder and flashing beacon installed within the room will clearly indicate the fire condition to personnel.

2) If a fire condition is confirmed by a second smoke detector, a 'second stage' alarm condition would be indicated and a count-down timer (that is variable to suit the client's requirements) would commence. As standard this would be set at 30 seconds.

During the timer count down a separate alarm bell within the module will operate with a different tone. This will inform personnel of the confirmed second stage alarm and the imminent discharge of the Inergen® into the room. Upon completion of the countdown, the GECP will actuate the relevant Solenoid Actuator and release the Inergen into the room.

Signals (via 'volt free' contacts) from the GECP will be provided to 'shut down' any HVAC or ancillary systems, as required prior to the discharge.

Each GECP will have an 'Extinguishing Release' Manual Break Glass Units to give personnel the opportunity to actuate the Inergen® system upon discovering a fire condition. The units will be yellow and require 'two stage' operation by incorporating a lift flap.

A 3-Way Status Indicator Lamp Unit c/w Auto/Manual Key-switch will be mounted outside any other entrances to the 'risk' area to clearly indicate the status of the Inergen® system at all times. Each 3-Way Status Indicator Lamp Unit will also be provided with a Manual Release, Abort and Hold Button.

All devices will be suitable for use within a 'safe area' environment.

3.11: Technical Qualifications, Clarifications and Exclusions

// Our offer has been prepared upon providing a VDS Approved 300 bar I-flow Clean Agent Gaseous Extinguishing systems with LPCB approved equipment. In accordance with the latest addendum of the BS EN 15004 Fixed Gas Extinguishing Systems.

// We have not allowed for coverage to any voids.

// We have not included for providing any connected or unconnected reserve cylinders.

// System design based on a design concentration of 45.7% with a minimum room temperature of 15°C and maximum room temperature of 20°C. Should the room temperatures be outside of this range then the associated effect on the Inergen System shall be subject to additional costs for additional cylinders and or protection measures.

// The quantity of Inergen discharge pipework for each risk area has been based upon the cylinder bank being located as detailed in this section of this tender.

// Means must be provided to ensure that following a discharge of Inergen, the fire and agent breakdown products can be safely vented to atmosphere. This may be provided by opening the windows and doors but may require an extract arrangement at low level in the protected area. Care should be taken to ensure that the post fire atmosphere is not ventilated to other parts of the building. Any mechanical ventilation provided should not form part of the normal ventilation system. Controls of the ventilation system should be outside the protected enclosure and should be key operated.

// We have not included for providing lockable mesh and/or cabinets cages for protection of the cylinder banks. We have assumed that the cylinders can be located indoors and wall mounted.

// We have included a price to supply pressure relief dampers that will be free issued for installation by others within our pricing for the rooms only, with a suitable free vent area to be provided by others between the floor and room for venting purposes.

// We have not allowed for multiple pressure relief dampers for cascade venting or any ducting requirements from the Pressure Relief Damper to external faces of the building. We also exclude the design and / or calculations associated with any required ducting.

// Pressure relief dampers have been calculated on an approximate discharge time of 60 seconds. The actual discharge time will not be known until a hydraulic calculation has been carried out at the detailed design stage post contract award. The price for the dampers is based on the assumption that a suitable free vent area will be available between the room and the void. If the room and the void are separately sealed additional dampers may be required, we therefore reserve the right to adjust our price accordingly.

// The design of the Inergen systems have been based on the free flow of gas within the protected area. However, should it be found that obstructions exist which are at present unknown, then this may affect our original design and therefore our Inergen gas quantities may have to be adjusted accordingly.

// No allowance has been made for sealing of the Inergen protected risk areas or for additional Inergen gas to compensate for excessive leakage.

// We have not included for discharge testing of the Inergen systems.

// All equipment will be suitable for indoor use, in a ‘safe’ area environment.

// Pipework included will be Seamless Grade ASTM A106 Grade B Schedule 40 / 80 Galvanized.

// At this stage our offer assumes direct ‘routing’ for distribution pipework from cylinder banks for nozzles. If alternative pipe runs are requested, we reserve the right to adjust our price accordingly.

// Painting of the pipework has not been included with Tyco scope of works.

// Our tender does not include for any civil works, Concrete Plinths, Builders work, including cutting holes and making good, sealing / fire stopping.

// No allowance has been made for removal or for re-instatement of any specialist ceilings or raised flooring, for cutting away, making good, and redecoration, moving any equipment, plant or stock or lifting carpets.

/ SECTION 4 – PROGRAMME OF WORKS /

4.1: Preliminary Tender Programme

We estimate the following consecutive time periods would be required from receipt of an instruction to proceed:

Item	Description	May				June					July				August					September				October				November				
		4	11	18	25	1	8	15	22	29	6	13	20	27	3	10	17	24	31	7	14	21	28	5	12	19	26	2	9	16	23	30
1	Misc																															
A	Initial Design																															
B	Design Approval Period																															
C	Procurement (Pumps and Tank on Long up to 14 Weeks Lead)																															
D	Test & Commission																															
1	Fire Suppression Installation																															
1.1	Fire Fighting Pumps																	2	2	2	2	2										
1.2	Extension to Underground Main				2																											
1.3	Pump House GRP Enclosure																															
1.4	Fire Water Storage Tank 1050m3																															
1.5	Wet Pipe Sprinkler System to Pumphouse																															
2.1	New Manifold #1 Located between Grid 33/34 (Connection for 3no Control Valves)																2															
2.2	New Manifold #2 Located between Grid 27/28 (Connection for 6no Control Valves)															2																
2.3	New Manifold #3 Located between Grid 14/15 (Connection for 6no Control Valves)														2																	
3.1	Dry Pipe Sprinkler System to Proposed Building Extension 10.2l/min over 279m2 (+30% For Dry Pipe)					2	2	2																								
3.2	Electrically Actuated Deluge System to Oversized 10tph Shredder (8.1mm/min)												2																			
3.3	Electrically Actuated Deluge to Conveyor (From Oversized Shredder to Autoclave) 10.2l/min over Protected Surface													2	2																	
4.1	Electrically Actuated Deluge System to Medical Grade Shredders #1 (10.2mm/min) 5No Shredders Covered by one Control Valve										2																					
4.2	Electrically Actuated Deluge System to Medical Grade Shredders #2 (10.2mm/min) 5No Shredders Covered by one Control Valve											2																				
4.3	Electrically Actuated Deluge to Conveyor (From Medical Grade Shredders to Autoclave) 10.2l/min over Protected Surface																			2	2	2										
4.4	Electrically Actuated Deluge to Conveyor (Autoclave Output) 10.2l/min over Protected Surface												2	2																		
4.5	Dry Pipe Sprinkler System to Empty Bin Storage Area 10.2l/min over 279m2 (+30% For Dry Pipe)								2	2																						
4.6	Electrically Actuated Deluge to Conveyor Zone #1 (From Autoclave to Storage) 10.2l/min over Protected Surface																	2	2													
5.1	Waste Storage Bunker - Self Oscillating Remote control Water Monitors - On/off Manual / Auto actuation (2 monitors)																						2	2								
5.2	Electrically Actuated Deluge System to Processed Waste Dryer (10.2mm/min)															2																
5.3	Electrically Actuated Deluge System to Metal Seperator (10.2mm/min)																2															
5.4	Electrically Actuated Deluge to Conveyor Zone #2 (From Autoclave to Storage) 10.2l/min over Protected Surface																						2	2								
5.5	Electrically Actuated Deluge to Advanced Pyrolysis Conveyor 10.2l/min over Protected Surface																								2	2						
5.6	Electrically Actuated Deluge to Export Conveyor 10.2l/min over Protected Surface																								2	2						

Should we be favoured with your instruction for this project, then an agreed detailed contract programme would be produced

4.2: Installation Strategy

This proposal and the preliminary timing plan detailed above are based upon certain site conditions being met, these include:

- // Site works to be undertaken during normal working hours, i.e. 8am to 6pm Monday to Friday
- // Site Installation works completed in one continuous visit to site, with clear and uninterrupted access to work areas as required.
- // High level sprinkler works undertaken prior to the installation of other services (i.e. ductwork, lighting, low level plant etc.)
- // Our offer includes for the provision of standard MEWP's to install the works in accordance with our corporate QEHS policies, our offer excludes the provision of any specialist access equipment, such as fixed scaffolding, rope access etc however we would advise that this will be required, in particular to install the roof area fuel sore sprinklers.
- // System range pipes will be fixed directly to the roof purlins utilising standard bracketry (ie purlin clips), no allowance has been made for drilling of purlins/steelwork.

4.3: Zero Harm

'We are committed to producing our products and providing our services to customers in a safe, responsible manner that respects the health and safety of our employees, the environment, our customers, shareholders and the communities in which we operate'.

// We implement environment, health and safety (EHS) management systems that are designed to prevent harm to people and then environment.

// We believe all accidents are preventable.

// We will continuously improve our EHS processes and systems to work toward our vision of Zero Hard to people and the environment.

// We will measure of EHS performance and report on progress in an open and transparent manner.

// We are accountable for our EHS performance.

// We will comply with all applicable environmental, health and safety laws and regulations and we will set higher standards where unacceptable risks are identified.

// We will be constructive members of the communities in which we operate and will engage with them to promote mutually beneficial EHS objectives.

// We seek to design our products to prevent harm to people and the environment during their manufacturer, use recycling or disposal. We deliver our services with the same principles in mind.

// We seek to achieve sustainable growth and business success by conserving energy, water and raw materials, using recycling and reducing waste.

// We will assist our customers and suppliers to improve their EHS programs and performance.

/ SECTION 5 – COMMERICAL PROPOSAL /

5.1: Commercial Offer

Please see below Tyco base scope items:

Item	Short Description	
1	**Water Supplies**	
1.1	Fire Fighting Pumps - 1 number 100% Electric duty & 1 number 100% Diesel Standby & 1 Electric Jockey Pump. PUMP RATING 2500 USGPM - Flooded Suction, in accordance with NFPA20 Rules , listed and approved by Factory Mutual (FM)	1
1.2	Extension to Underground Main DN225 HDPE SDR17 (Local to Pump House and Feed To Manifold #1)	1
1.3	Pump House GRP Enclosure	1
1.4	Fire Water Storage Tank 1250m3	1
1.5	Wet Pipe Sprinkler System to Pumphouse	1
2	**Manifolds**	
2.1	New Manifold #1 Located between Grid 33/34 (Connection for 3no Control Valves)	1
2.2	New Manifold #2 Located between Grid 27/28 (Connection for 6no Control Valves)	1
2.3	New Manifold #3 Located between Grid 14/15 (Connection for 6no Control Valves)	1
3	**Fire Suppression Manifold #1**	
3.1	Dry Pipe Sprinkler System to Proposed Building Extension 10.2l/min over 279m2 (+30% For Dry Pipe)	1
3.2	Electrically Actuated Deluge System to Oversized 10tph Shredder (8.1mm/min)	1
3.3	Electrically Actuated Deluge to Conveyor (From Oversized Shredder to Autoclave) 10.2l/min over Protected Surface	1
4	**Fire Suppression Manifold #2**	
4.1	Electrically Actuated Deluge System to Medical Grade Shredders #1 (10.2mm/min) 5No Shredders Covered by one Control Valve	1
4.2	Electrically Actuated Deluge System to Medical Grade Shredders #2 (10.2mm/min) 5No Shredders Covered by one Control Valve	1
4.3	Electrically Actuated Deluge to Conveyor (From Medical Grade Shredders to Autoclave) 10.2l/min over Protected Surface	1
4.4	Electrically Actuated Deluge to Conveyor (Autoclave Output) 10.2l/min over Protected Surface	1
4.5	Dry Pipe Sprinkler System to Empty Bin Storage Area 10.2l/min over 279m2 (+30% For Dry Pipe)	1
4.6	Electrically Actuated Deluge to Conveyor Zone #1(From Autoclave to Storage) 10.2l/min over Protected Surface	1
5	**Fire Suppression Manifold #3**	
5.1	Waste Storage Bunker - Self Oscillating Remote control Water Monitors - On/off Manual / Auto actuation (2 monitors)	1
5.2	Electrically Actuated Deluge System to Processed Waste Dryer (10.2mm/min)	1
5.3	Electrically Actuated Deluge System to Metal Seperator (10.2mm/min)	1
5.4	Electrically Actuated Deluge to Conveyor Zone #2(From Autoclave to Storage) 10.2l/min over Protected Surface	1
5.5	Electrically Actuated Deluge to Advanced Pyrolysis Conveyor 10.2l/min over Protected Surface	1
5.6	Electrically Actuated Deluge to Export Conveyor 10.2l/min over Protected Surface	1

G	**Gaseous Extinguishant Systems**	
G 1.1	Gas Powered Engine #1 - Inergen System	1
G 1.2	Gas Powered Engine #2 - Inergen System	1
G 1.3	Gas Powered Engine #3 - Inergen System	1
G 1.4	Gas Powered Engine #4 - Inergen System	1
G 1.5	Gas Powered Engine #5 - Inergen System	1
G 1.6	Gas Powered Engine #6 - Inergen System	1
G 1.7	Gas Powered Engine #1 - Detection System	1
G 1.8	Gas Powered Engine #2 - Detection System	1
G 1.9	Gas Powered Engine #3 - Detection System	1
G 1.10	Gas Powered Engine #4 - Detection System	1
G 1.11	Gas Powered Engine #5 - Detection System	1
G 1.12	Gas Powered Engine #6 - Detection System	1
FD	**Fire Detecion**	
FD 1.1	Bin Shredders	1
FD 1.2	Bulky Shredder	1
FD 1.3	New Extension	1
FD 1.4	Conveyors	1
FD 1.5	Dryer & Metal Seperator	1
FD 1.6	Waste Bunker	1
FD 1.7	Pyrolysis Furnace	1
FD 1.8	Waste Heat Recovery Unit	1
FD 1.9	Bin Stores & Cleaning Area	1
FD 1.10	Pump House Modifications	1
P	**Preliminaries**	
P-1	Design & Hydraulic Calculations	1
P-2	Project Engineering	1
P-3	Commissioning Mechanical	1
P-4	Site Supervision	1
P-5	Site Establishment	1
P-6	Tools and Access Equipment	1

Co-ordination / Design Development

Should Tyco be responsible for the fundamental design of the Fire Fighting system Detailed Above , the Employer shall be fully responsible for the co-ordination of such design within the building structure, fabric and with all other services. Tyco shall submit their outline design to the Employer to enable the co-ordination and design development process to be undertaken. When this process is completed the Employer shall issue their instructions for incorporation into Tyco's design / layout. Once Tyco has updated the design / layout with the co-ordination instructions, the revised design / layout shall be issued as a Construction Drawing for approval by the Employer. On receipt of such approval Tyco shall commence procurement, fabrication and installation.

Should any amendments to the approved design and installation be required due to clashes with other services, the building structure / components, or due to further design development then such amendments / alterations shall constitute a variation under the Contract and be valued in accordance with the agreed terms.

Defects Liability Period

Tyco Fire & Integrated Solutions offer a 12 month Defects Liability Period (as stated within the Tyco terms and conditions clause 11) which is subject to equipment installed being correctly maintained at all times by a suitably approved LPCB organisation under the provision of a service contract.

BRITISH STANDARDS

Unless specified otherwise within this document, all equipment/components offered in this specification would be in accordance with the appropriate British, or equivalent international standards.

PERFORMANCE STATEMENT

We have included for materials and equipment that we confirm to the best of our knowledge shall be suitable for the conditions in which it is located. Should the site conditions require a higher standard, then any improvement would be subject to additional costs over and above this tender offer.

SERVICE AND MAINTENANCE

On completion of our works, operating and maintenance instructions would be provided to enable the client to conduct the necessary regular tests to verify that the installed equipment functions correctly and to maintain the system in good working order.
If required we would be please to supply a quotation for providing an after sales maintenance service. This normally consists of two visits per year by one of our service engineers who would test the functions of all the installed equipment and visually inspect the condition of the system. A report would then be handed to the client detailing our findings.

FM APPROVED EQUIPMENT

LPCB approved and/or FM/UL listed equipment will only be provided where specifically stated in this document.

HYDRAULIC CALCULATIONS

All complex hydraulic pressure and flow calculations would be carried out by computer using specialized Fire Protection Calculation programmes, Firecad 2012.

/ APPENDIX A – ATTENDANCES /

Please see below a list of the attendances proposed by Tyco:-

Item	Description	Scope of Works (Identify with an 'x')			Comment
		Tyco	Excluded	Client	
1.0 General					
1.1	Design	X			
1.2	Equipment/materials selection & Verification	X			
1.3	Calculations	X			
1.4	Co-ordination works	X			
1.5	Site Surveys	X			
1.6	Procurement	X			
1.7	Manufacturing	X			
1.8	Works Testing	X			
1.9	3rd Party Inspections		X		
1.10	Delivery to project site	X			
1.11	Project Management	X			
1.12	Site Supervision	X			
1.13	Health & Safety Documentation (RAMS)	X			
1.14	Programming & Planning	X			
1.15	Meeting Attendance at Clients Offices	X			
1.16	Meeting Attendance at Project site	X			
1.17	Progress Reporting & Forecasting	X			
1.18	Installation	X			To be conducted in one continuous phase.
1.19	Inspection, Testing & Commissioning	X			To be conducted in one continuous phase.
1.20	Training	X			
1.21	As Built's	X			
1.22	Documentation & Certification Packages	X			
1.23	Handover Certification	X			
1.24	12 Month Warranty Period from Handover	X			

Item	Description	Scope of Works (Identify with an 'x')			Comment
		Tyco	Excluded	Client	
2.0 Summary of Particulars					
2.1	Performance Bond	X			
2.2	Parent Company Guarantee		X		
2.3	Collateral Warranty		X		
2.4	Extended Warranty Period		X		
2.5	Retention		X		

Item	Description	Scope of Works (Identify with an 'x')			Comment
		Tyco	Excluded	Client	
3.0 Site Attendances					
3.1	Power for tools			X	110v Distributed Power
3.2	General Lighting			X	
3.3	Task Lighting	X			
3.4	Mobile towers & General Access Equipment	X			Mobile Towers up to 5metre in height
3.5	Mechanical platforms	X			
3.6	Fixed Scaffolding		X		Tyco to provide scaffolding to bunker roof area only.
3.7	Rope Access			X	Rope Access is excluded as Tyco do not deem this to be a safe method of installation.
3.8	Water for testing			X	
3.9	Power Supply			X	Power supply to pumps and panels.
3.10	Water Supply, Drainage & Sewerage for Site Setup			X	
3.11	Water & Electricity Consumption Costs			X	
3.12	Ground Preparation & Reinstatement for Site Setup			X	
3.13	Site welfare facilities			X	
3.14	Site Offices			X	
3.15	Site Storage	X			
3.16	Unloading, Hoisting & Distribution	X		X	Specialist Hoisting by Customer
3.17	Laydown internal / external			X	
3.18	Site Security			X	
3.19	Cleaning	X			
3.20	Waste removal	X			Cleaning of workfaces.
3.21	Waste Disposal			X	Waste disposal by client.
3.22	Protection of the Works	X			
3.23	Fire Watching	X			Fire watching and / or protection whilst fire systems are temporarily isolated.
3.24	Impairment Notice	X		X	Liaison with Fire insurer and statutory authority.
3.25	Access / Egress			X	Unrestricted access / egress to all workfaces.
3.26	Services Co-ordination			X	
3.27	Drainage			X	Drainpoint to be provided within 1 metre of Tyco valvesets / pumps / Inspectors test points.
3.28	Contaminated ground			X	Proposal is made on the basis that the ground is free from contamination, no additional measures have been included.
3.29	Barrier tapes / Signs	X			
3.30	Craneage			X	Provision of hoisting / craneage for lifting pipes/ equipment/MEWP's onto upper levels / into position.

4.0 Trade Works					
4.1	Holes through walls/floor			X	Tyco Include up to 50mm but exclude core drilling.
4.2	Holes through ceilings			X	
4.3	Make good holes			X	
4.4	Fire Stopping			X	
4.5	Pipe Sleeves			X	
4.6	Removal of Water / Foam Following Discharge Testing			X	
4.7	Painting			X	
4.8	Trace Heating & Lagging			X	
4.9	Civils works			X	Concrete plinths for pumps / tanks / valve manifolds
4.10	Excavation			X	Excavation / securing / backfilling & making good

5.0 Certification & System Approvals					
5.1	BS EN 10204 **Type 2.1** Certificate of Conformity	X			
5.2	BS EN 10204 **Type 2.2** Manufacturers nonspecific inspection Testing Certificate		X		
5.3	BS EN 10204 **Type 3.1** Manufacturers specific Inspection witness Testing Certificate		X		
5.4	BS EN 10204 **Type 3.2** Manufacturers specific Inspection 3rd party witness Testing Certificate		X		Witness testing of fire pumps & panels only
5.5	O&M Manual	X			
5.6	Commissioning Manual	X			
5.7	Manufacturers Data Book	X			
5.8	End Of Manufacturing Report		X		
5.9	PED Declaration of Conformity	X			
5.10	CE Declaration of Conformity	X			
5.11	LPS1048 (Sprinkler Systems)	X			
5.12	Fire Officer Certification		X		
5.13	Local Agency Approval		X		
5.14	3rd Party Approval & Testing		X		

/ APPENDIX B – CLIENT RESPONSIBILITIES /

B.1: Professional Services

// **Planning Application:** A qualified architect and/or consulting engineer may need to be engaged to prepare and submit a planning application.

// **Planning Supervision:** A suitably qualified services consulting may need to be engaged to prepare and submit form F10 and generally liaise with the HSE and other work package contractors regarding construction stage H&S plans and CDM regulations and requirements.

// **Consent:** A suitably qualified services consulting may need to be engaged to prepare and submit an outline specification, fire risk assessment and/or fire strategy document and liaise with and obtain from Building Control/Fire Officer consent.

// **Bases/Foundations:** A qualified architect and/or consulting engineer will need to be engaged to prepare and submit designs and undertake scheme development.

// **Structure Integrity:** A suitably qualified structural engineer will need to undertake the necessary co-ordinated checks and calculations to determine the effect of the sprinkler system weight load and the pipe fixing brackets upon the building structure. Details of weight loads of water filled pipes will detailed on sprinkler service design drawings that will be issued during the design development period.

// **Asbestos:** Under the Control of Asbestos of Work Regulations 2002, as a Client you have a legal responsibility to provide us with the Asbestos Register appertaining to site and all areas of work/ access involved with this contract. Can you please ensure that your CDM Coordinator/ Principle Contractor provide us with this information at tender stage.

// **Noise Calculations:** A suitably qualified engineer will need to undertake the noise calculations to determine the effect of the noise output from the diesel driven fire pump(s), the anticipated noise output is detailed as follows: Each Diesel Pump – 105dba at 1m free field

B.2: Electrical Works

// **Primary Electric Pump:** A secure and independant power supply is to be installed terminated within the pump controller. The power supply cable requires to be installed in accordance with NFPA20 The electric pump specification is as follows;

Power Supply:	Electric Set	415v / 3ph / 50Hz - 4 wire
	Diesel Set	240v / 1ph / 50Hz - 2 wire
	Jockey set	415v / 3ph / 50Hz - 4 wire

// **Pumphouse Dist Board:** A six-way distribution board/consumer unit is to be provided and installed within the pump-house to provide power to the electrical items of equipment detailed below.

// **Remote Alarm Panel:** The remote alarm panel will be provided free issue for installation by others together with alarm panel cabling from the pump house to the panel. A non-switched fused single-phase 13-amp power supply is to be provided adjacent to the alarm panel.

The Selected Panel Location is: Gatehouse

The signals that are to be monitored at the remote alarm panel area as follows:

1. Electric Pump on Demand
2. Electric Pump Start Failure
3. Electric Pump Running
4. Electric Pump Power Not Available
5. Diesel Pump Auto Mode Off
6. Diesel Pump Start Failure
7. Diesel Pump Running
8. Diesel Pump Fault at Controller
9. Trace Heating System Alarm
10. Fire in Pumphouse

// **Earth Bonding**: Earth bonding of sprinkler system to main earth terminals and earth continuity tests are the responsibility of others.

// **Valve Monitoring:** Each of the main control valves will be installed with a flow switch to enable the system to be Monitored via the fire alarm/BMS system. Consideration should also be given to monitoring the status of each stop valve capable of interrupting the flow of water. Volt free contacts shall be included on these devices to enable others to monitor these signals on secondary systems

B.3: Pump house works

// **Pumphouse:** Client to design and construct pump house to provide a U-Value of 0.45 w/m^2/ºC including holes through walls and floors and generally making good and incorporating the following;

// **Pump Plinths/Grouting:** Construction of pump plinth reinforced concrete base to receive electric and diesel fire pumps. Grouting & screeding as necessary after final fire pump installation around the bedplate**.**

// **Drainage & Gullies:** Adequate drainage facilities within the pump room for tank overflows, drain points etc.

// **Pad Stools:** Pad stools are concrete bases to support pump suction pipe work generally 300x300x300mm.

// **Lifting Beam:** Lifting beam should be provided along centre line of each of the fire pumps to allow engine to be hoisted if required after installation (i.e. Maintenance)

// **Tank Foundations:** Design and construct water storage tank foundation to provide a ground loading in accordance with the schedule detailed below. The required ground loading will be confirmed during the design development period.

// **Drainage:** Provision of adequate drainage adjacent to water storage tanks and pump house, connected to foul drainage system, positions of gullies shall be advised during the design development period.

// **Water Main Connection:** New supply connection from local water company main is to be left terminated above ground adjacent to water storage tank bases with an NP16 flange ready for connection with the tank infill riser. The connection will need to provide either of the flow rate characteristics detailed as follows:

// **Tank Infill over 8 hours to NFPA: 1906 litres/min @ 2.0Bar**

/ APPENDIX C – PAST EXPERIENCE /

Project Name	Project Location	Client	Works Undertaken
Chineham Waste to Energy Plant	UK	CNIM France	Design, supply, install, test and commission of a site wide fire protection and detection system.
Marchwood Waste to energy Plant	UK	CNIM France	Design, supply, install, test and commission of a site wide fire protection and detection system.
Isle of Man waste to energy Plant	UK	Kvaerner Stockton	Design, supply, install, test and commission of a site wide fire protection and detection system.
Portsmouth waste to energy	UK	CNIM France	Design, supply, install, test and commission of a site wide fire protection and detection system.
Lakeside waste to energy	UK	Edmund Nuttal	Design, supply, install, test and commission of a site wide fire protection and detection system.
Newhaven Waste to Energy Plant	UK	Krobath Building Technology	Design, supply, install, test and commission of a site wide fire protection and detection system.
Staffordshire Waste to Energy Plant	UK	LX Engineering	Design, supply, install, test and commission of a site wide fire protection and detection system.
Lincolnshire Waste to Energy Plant	UK	NG Bailey	Design, supply, install, test and commission of a site wide fire protection and detection system.
Cardiff Waste to Energy Plant	UK	LX Engineering	Design, supply, install, test and commission of a site wide fire protection system.
Leeds Waste to Energy Plant	UK	Imtech	Design, supply, install, test and commission of a site wide fire protection & Detection system.
Shropshire Waste to Energy Plant	UK	Imtech	Design, supply, install, test and commission of a site wide fire protection & Detection system.
Suffolk Waste to Energy Plant	UK	Imtech	Design, supply, install, test and commission of a site wide fire protection & Detection system.
Wilton Waste to Energy Plant	UK	LX Engineering	Design, supply, install, test and commission of a site wide fire protection & Detection system.
Cornwall Waste to Energy Plant	UK	Vinci Environment	Design, supply, install, test and commission of a site wide fire protection & Detection system.
Allerton Waste to Energy Plant	UK	Vinci Environment	Design, supply, install, test and commission of a site wide fire protection & Detection system.